JUNCTION BOXES

series **R..I**

Protection	Zone			
Mines	n.a.	IM2	Ex db I Mb
Gas	1-2	II2G	Ex db IIC T6÷T4 Gb
Dusts	21-22	II2D	Ex tb IIIC T85°C÷T135°C Db

Degree of Protection	IP66
Entries Threading	NPT ANSI B1.20
Material	Stainless Steel AISI 316L
Painting	See Options

Amb. Temp.			
Standard	-20°C	+40°C
Extended	-50°C	+85°C

Standards and Certificates

Directive 2014/34/EU (ATEX)	
EN 60079-0 • EN 60079-1 • EN 60079-31	
CE	BVI 14 ATEX 0068X
U	BVI 14 ATEX 0067U
IECEx	IEC 60079-0 • IEC 60079-1 • IEC 60079-31
	IECEx EPS 14.0086X
	IECEx EPS 14.0087U

- Ideal for routing and interconnecting the wires at the intersection of the conduits.
- Certificated either for the version complete with electrical apparatus or empty as an Ex component.

Options

- Terminal block: slatted terminals = MH
  modular terminals = MM
- Cable entries threading: Metric ISO 262 (M).
- External Painting: on customer specification.
- Material: Aluminum (see page B03).
- Accessories (see page I07).

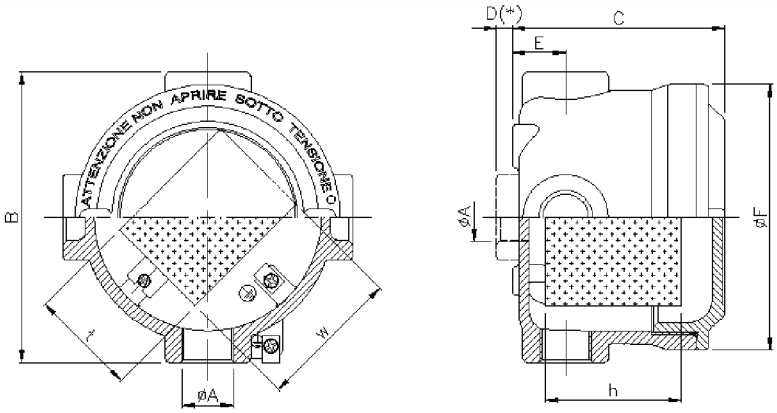

Entries Diagram

Type	Size	ØA [NPT]	Size	ØA [ISO]	External Dimensions (mm)					Electrical app. dimensions (mm)			$V_{app.elet.}$ (dm^3)	Weight (kg)
					B	C	D(*)	E	ØF	h	w	t		
R..I	14	1/2"	14M	M20x1,5	80	69	9	20	71	40	30	28	0.033	0.96
R..I	24	3/4"	24M	M25x1,5	80	69	9	20	71	40	30	28	0.033	0.96
R..I	16	1/2"	16M	M20x1,5	100	68	9.5	22.5	90	40	50	35	0.070	1.25
R..I	26	3/4"	26M	M25x1,5	100	68	9.5	22.5	90	40	50	35	0.070	1.25
R..I	36A	1"	36AM	M32x1,5	100	73	9.5	22.5	90	45	50	35	0.078	1.30
R..I	27	3/4"	27M	M25x1,5	126	82	11	24	112	50	65	45	0.146	2.20
R..I	37	1"	37M	M32x1,5	126	82	11	24	112	50	65	45	0.146	2.20
R..I	28	3/4"	28M	M25x1,5	145	99	9.5	27	131	65	70	60	0.273	3.50
R..I	38	1"	38M	M32x1,5	145	99	9.5	27	131	65	70	60	0.273	3.50
R..I	48	1.1/4"	48M	M40x1,5	145	99	9.5	27	131	65	70	60	0.273	3.50
R..I	58	1.1/2"	58M	M50x1,5	145	99	9.5	27	131	65	70	60	0.273	3.50
R..I	29	3/4"	29M	M25x1,5	161	115	9.5	27	146	80	85	65	0.414	4.40
R..I	39	1"	39M	M32x1,5	161	115	9.5	27	146	80	85	65	0.414	4.40
R..I	59	1.1/2"	59M	M50x1,5	161	115	9.5	27	146	80	85	65	0.414	4.40
R..I	69	2"	69M	M63x1,5	161	115	9.5	27	146	80	85	65	0.414	4.40

NOTES

The drawing is valid for dimensional data only. For further details, such as the orientation of the internal / external joints, there might be differences among the different models.

(*) Applicable to 5 entry version only, where the fifth is at the bottom of the box.

The temperature class and the maximum surface temperature may vary depending on the ambient temperature and the power dissipation of the equipment contained in the box. (see pag. I09).

The extended A.T. is -40°C÷+85°C for boxes with EPDM O-Ring (temperature class T6/T5). The extended A.T. is -50°C÷+85°C for boxes with Silicone O-Ring (temperature class T6/T5/T4).

I

Order Coding

Example: RTI 36A MM

Type (Scheme)	Entries Size and Threading	Body Size	Model
R T I	3 = 1" NPT	6A	MM

JUNCTION BOXES and BOXES for EQUIPMENT with EXTENSION

series **R..I**

Protection		Zone			
Mines		n.a.	IM2	Ex db I Mb
Gas		1-2	II2G	Ex db IIC T6÷T4 Gb
Dusts		21-22	II2D	Ex tb IIIC T85°C÷T135°C Db

Degree of Protection	IP66
Entries Threading	NPT ANSI B1.20
Material	Stainless Steel AISI 316L
Painting	See Options

Amb. Temp.			
Standard	-20°C	+40°C
Extended	-50°C	+85°C

Standards and Certificates

Directive 2014/34/EU (ATEX)	
EN 60079-0 • EN 60079-1 • EN 60079-31	
CE	BVI 14 ATEX 0068X
U	BVI 14 ATEX 0067U
IECEx	IEC 60079-0 • IEC 60079-1 • IEC 60079-31
	IECEx EPS 14.0086X
	IECEx EPS 14.0087U

- Designed to house electrical/electronic equipment and instruments.
- Standard or extended depth by adding one of the available extensions (short or long).
- Raw or painted outside surface according to customer specifications.
- Certificated either for the version complete with electrical apparatus or empty as an Ex component.

Options

- Terminal block (see page B04).
- Cable entries threading: Metric ISO 262 (M).
- External Painting: on customer specification.
- Material: Aluminum (see page B03).
- Accessories (see page I07).
- Apparatus/Instruments (see page I10).

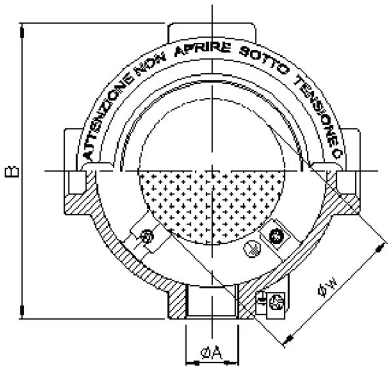

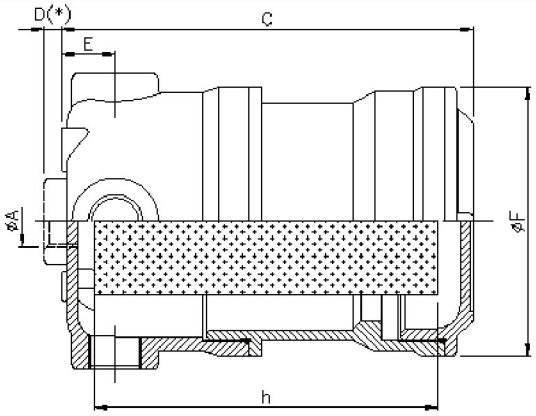

NOTES

The drawing is valid for dimensional data only. For further details, such as the orientation of the internal / external joints, there might be differences among the different models.

(*) Applicable to 5 entry version only, where the fifth is at the bottom of the box.

The temperature class and the maximum surface temperature may vary depending on the ambient temperature and the power dissipation of the equipment contained in the box. (see pag. I09).

The extended A.T. is -40°C÷+85°C for boxes with EPDM O-Ring (temperature class T6/T5). The extended A.T. is -50°C÷+85°C for boxes with Silicone O-Ring (temperature class T6/T5/T4).

Entries Diagram

WITHOUT EXTENSION

Type	Size	ØA [NPT]	Size	ØA [ISO]	External Dimensions (mm) B	C	D(*)	E	ØF	Elec. app. dimen. (mm) h	Øw	$V_{app.elet.}$ (dm³)	Weight (kg)
R..I	14	1/2"	14M	M20x1,5	80	69	9	20	71	40	30	0.033	0.96
R..I	24	3/4"	24M	M25x1,5	80	69	9	20	71	40	30	0.033	0.96
R..I	16	1/2"	16M	M20x1,5	100	68	9.5	22.5	90	40	50	0.070	1.25
R..I	26	3/4"	26M	M25x1,5	100	68	9.5	22.5	90	40	50	0.070	1.25
R..I	36A	1"	36AM	M32x1,5	100	73	9.5	22.5	90	45	50	0.078	1.30
R..I	27	3/4"	27M	M25x1,5	126	82	11	24	112	50	65	0.146	2.20
R..I	37	1"	37M	M32x1,5	126	82	11	24	112	50	65	0.146	2.20
R..I	28	3/4"	28M	M25x1,5	145	99	9.5	27	131	65	70	0.273	3.50
R..I	38	1"	38M	M32x1,5	145	99	9.5	27	131	65	70	0.273	3.50
R..I	48	1.1/4"	48M	M40x1,5	145	99	9.5	27	131	65	70	0.273	3.50
R..I	58	1.1/2"	58M	M50x1,5	145	99	9.5	27	131	65	70	0.273	3.50
R..I	29	3/4"	29M	M25x1,5	161	115	9.5	27	146	80	85	0.414	4.40
R..I	39	1"	39M	M32x1,5	161	115	9.5	27	146	80	85	0.414	4.40
R..I	59	1.1/2"	59M	M50x1,5	161	115	9.5	27	146	80	85	0.414	4.40
R..I	69	2"	69M	M63x1,5	161	115	9.5	27	146	80	85	0.414	4.40

WITH EXTENSION

Code	Ext. Dim. (mm) C	Elec. app. dim. (mm) h	$V_{app.elet.}$ (dm³)	Weight (kg)
110	129	90	0.075	1.70
110	129	90	0.075	1.70
95÷120	118÷143	80÷105	0.14÷0.18	2.10
95÷120	118÷143	80÷105	0.14÷0.18	2.10
100÷125	123÷148	85÷110	0.14÷0.18	2.20
105÷145	132÷172	90÷130	0.26÷0.35	3.50
105÷145	132÷172	90÷130	0.26÷0.35	3.50
125÷165	149÷189	100÷140	0.42÷0.58	5.10
125÷165	149÷189	100÷140	0.42÷0.58	5.10
125÷165	149÷189	100÷140	0.42÷0.58	5.10
125÷165	149÷189	100÷140	0.42÷0.58	5.10
140÷190	165÷215	120÷160	0.66÷0.88	6.80
140÷190	165÷215	120÷160	0.66÷0.88	6.80
140÷190	165÷215	120÷160	0.66÷0.88	6.80
140÷190	165÷215	120÷160	0.66÷0.88	6.80

Order Coding

Example: RTI 26/105 ...

Type (Scheme)	Entries Size and Threading	Body Size	/	Internal height (only with extension see h)	Model
R T I	2 = 3/4''	6		105	...

BOXES for EQUIPMENT and INSTRUMENTS

series **RO..I**

Protection	Zone			
Mines	n.a.	IM2	Ex db I Mb
Gas	1-2	II2G	Ex db IIC T6÷T4 Gb
Dusts	21-22	II2D	Ex tb IIIC T85°C÷T135°C Db

Degree of Protection	IP66
Entries Threading	NPT ANSI B1.20
Material	Stainless Steel AISI 316L
Painting	See Options

Amb. Temp.			
Standard	-20°C		+40°C
Extended	-50°C		+85°C

Standards and Certificates

Directive 2014/34/EU (ATEX)	
EN 60079-0 • EN 60079-1 • EN 60079-31	
CE	BVI 14 ATEX 0068X
U	BVI 14 ATEX 0067U
IEC 60079-0 • IEC 60079-1 • IEC 60079-31	
IECEx EPS 14.0086X	
IECEx EPS 14.0087U	

- Threaded cover with tempered glass
- Designed to house electrical/electronic equipment and instruments.
- Raw or painted outside surface according to customer specifications.
- Certificated either for the version complete with electrical apparatus or empty as an Ex component.

Options

- Cable entries threading: Metric ISO 262 (M).
- External Painting: on customer specification.
- Material: Aluminum (see page B06).
- Accessories (see page I07).
- Equipment/Instruments (see page I10).

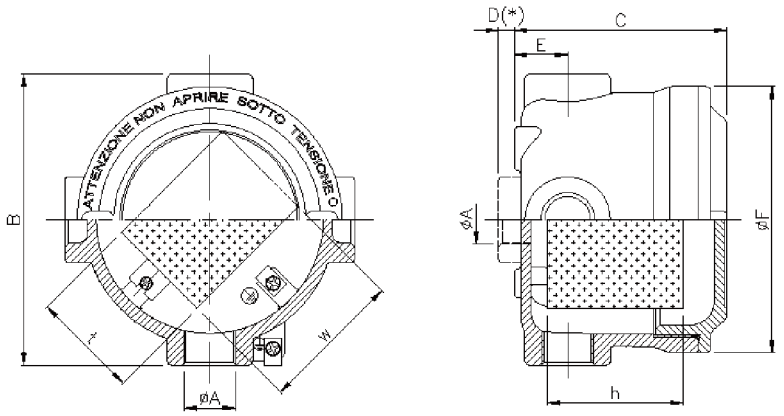

Entries Diagram

Type	Size	ØA [NPT]	Size	ØA [ISO]	External Dimensions (mm)						Elect. app. dimensions (mm)			$V_{app.elet.}$ (dm^3)	Weight (kg)
					B	C	D(*)	E	ØF	ØL	h	w	t		
RO..I	14	1/2"	14M	M20x1,5	80	69	9	20	71	38	30	28	30	0.025	0.96
RO..I	24	3/4"	24M	M25x1,5	80	69	9	20	71	38	30	28	30	0.025	0.96
RO..I	16	1/2"	16M	M20x1,5	100	68	9.5	22.5	90	50	50	35	30	0.052	1.25
RO..I	26	3/4"	26M	M25x1,5	100	68	9.5	22.5	90	50	50	35	30	0.052	1.25
RO..I	36A	1"	36AM	M32x1,5	100	73	9.5	22.5	90	50	50	35	35	0.061	1.30
RO..I	27	3/4"	27M	M25x1,5	126	82	11	24	112	70	65	45	40	0.108	2.20
RO..I	37	1"	37M	M32x1,5	126	82	11	24	112	70	65	45	40	0.108	2.20
RO..I	28	3/4"	28M	M25x1,5	145	99	9.5	27	131	85	70	60	55	0.231	3.50
RO..I	38	1"	38M	M32x1,5	145	99	9.5	27	131	85	70	60	55	0.231	3.50
RO..I	48	1.1/4"	48M	M40x1,5	145	99	9.5	27	131	85	70	60	55	0.231	3.50
RO..I	58	1.1/2"	58M	M50x1,5	145	99	9.5	27	131	85	70	60	55	0.231	3.50
RO..I	29	3/4"	29M	M25x1,5	161	115	9.5	27	146	100	85	65	65	0.360	4.40
RO..I	39	1"	39M	M32x1,5	161	115	9.5	27	146	100	85	65	65	0.360	4.40
RO..I	59	1.1/2"	59M	M50x1,5	161	115	9.5	27	146	100	85	65	65	0.360	4.40
RO..I	69	2"	69M	M63x1,5	161	115	9.5	27	146	100	85	65	65	0.360	4.40

NOTES

The drawing is valid for dimensional data only. For further details, such as the orientation of the internal / external joints, there might be differences among the different models.

(*) Applicable to 5 entry version only, where the fifth is at the bottom of the box.

The temperature class and the maximum surface temperature may vary depending on the ambient temperature and the power dissipation of the equipment contained in the box. (see pag. I09).

The extended A.T. is -40°C÷+85°C for boxes with EPDM O-Ring (temperature class T6/T5). The extended A.T. is -50°C÷+85°C for boxes with Silicone O-Ring (temperature class T6/T5/T4).

Order Coding

Example: ROTI 26 ...

Type	Scheme		Entries Size and Threading	Body Size	Model
RO	T	I	2 = 3/4''	6	...

BOXES for EQUIPMENT and INSTRUMENTS with EXTENSION

series **RO..I**

Protection		Zone			
	Mines		n.a.	IM2	Ex db I Mb
	Gas		1-2	II2G	Ex db IIC T6÷T4 Gb
	Dusts		21-22	II2D	Ex tb IIIC T85°C÷T135°C Db

Degree of Protection	IP66
Entries Threading	NPT ANSI B1.20
Material	Stainless Steel AISI 316L
Painting	See Options

Amb. Temp.			
Standard	-20°C		+40°C
Extended	-50°C		+85°C

Standards and Certificates

Directive 2014/34/EU (ATEX)	
EN 60079-0 • EN 60079-1 • EN 60079-31	
CE	BVI 14 ATEX 0068X
U	BVI 14 ATEX 0067U
IEC 60079-0 • IEC 60079-1 • IEC 60079-31	
IECEx EPS 14.0086X	
IECEx EPS 14.0087U	

- Threaded cover with tempered glass
- Designed to house electrical/electronic equipment and instruments.
- Standard or extended depth by adding one of the available extensions (short or long).
- Certificated either for the version complete with electrical apparatus or empty as an Ex component.

Options

- Cable entries threading: Metric ISO 262 (M).
- External Painting: on customer specification.
- Material: Aluminum (see page B06).
- Accessories (see page I07).
- Equipment/Instruments (see page I10).

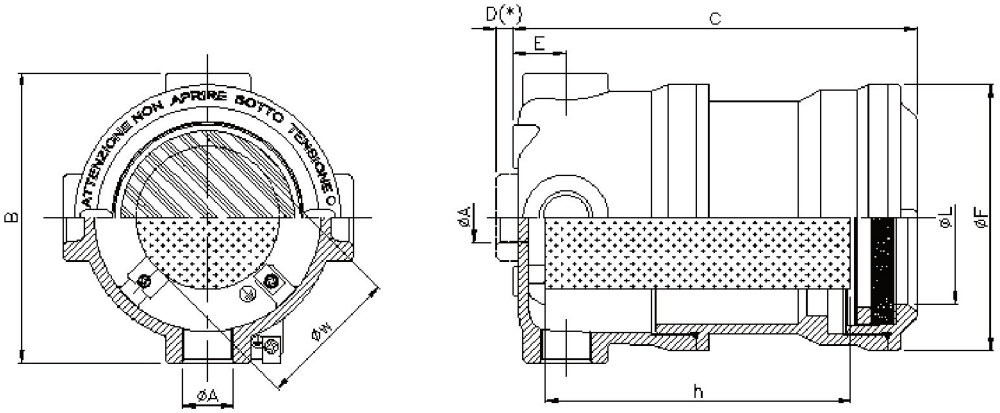

NOTES

The drawing is valid for dimensional data only. For further details, such as the orientation of the internal / external joints, there might be differences among the different models.

(*) Applicable to 5 entry version only, where the fifth is at the bottom of the box.

The temperature class and the maximum surface temperature may vary depending on the ambient temperature and the power dissipation of the equipment contained in the box. (see pag. I09).

The extended A.T. is -40°C÷+85°C for boxes with EPDM O-Ring (temperature class T6/T5). The extended A.T. is -50°C÷+85°C for boxes with Silicone O-Ring (temperature class T6/T5/T4).

Entries Threading

WITHOUT EXTENSION															WITH EXTENSION				
Type	Size	ØA [NPT]	Size	ØA [ISO]	External Dimensions (mm)						Elec. app. dim. (mm)		$V_{app.elet.}$ (dm^3)	Weight (kg)	Code	Ext. Dim. (mm)	Elec. app. dim. (mm)	$V_{app.elet.}$ (dm^3)	Weight (kg)
					B	C	D(*)	E	ØF	ØL	h	Øw				C	h		
RO..I	14	1/2"	14M	M20x1,5	80	69	9	20	71	38	30	30	0.033	0.96	95	129	75	0.053	1.70
RO..I	24	3/4"	24M	M25x1,5	80	69	9	20	71	38	30	30	0.033	0.96	95	129	75	0.053	1.70
RO..I	16	1/2"	16M	M20x1,5	100	68	9.5	22.5	90	50	30	50	0.070	1.25	85÷110	118÷143	70÷95	0.13÷0.15	2.10
RO..I	26	3/4"	26M	M25x1,5	100	68	9.5	22.5	90	50	30	50	0.070	1.25	85÷110	118÷143	70÷95	0.13÷0.15	2.10
RO..I	36A	1"	36AM	M32x1,5	100	73	9.5	22.5	90	50	35	50	0.078	1.30	90÷115	123÷148	75÷100	0.13÷0.15	2.20
RO..I	27	3/4"	27M	M25x1,5	126	82	11	24	112	70	40	65	0.146	2.20	95÷135	132÷172	80÷120	0.23÷0.30	3.50
RO..I	37	1"	37M	M32x1,5	126	82	11	24	112	70	40	65	0.146	2.20	95÷135	132÷172	80÷120	0.23÷0.30	3.50
RO..I	28	3/4"	28M	M25x1,5	145	99	9.5	27	131	85	55	70	0.273	3.50	115÷155	149÷189	90÷130	0.40÷0.55	5.10
RO..I	38	1"	38M	M32x1,5	145	99	9.5	27	131	85	55	70	0.273	3.50	115÷155	149÷189	90÷130	0.40÷0.55	5.10
RO..I	48	1.1/4"	48M	M40x1,5	145	99	9.5	27	131	85	55	70	0.273	3.50	115÷155	149÷189	90÷130	0.40÷0.55	5.10
RO..I	58	1.1/2"	58M	M50x1,5	145	99	9.5	27	131	85	55	70	0.273	3.50	115÷155	149÷189	90÷130	0.40÷0.55	5.10
RO..I	29	3/4"	29M	M25x1,5	161	115	9.5	27	146	100	65	85	0.414	4.40	125÷175	165÷215	100÷150	0.60÷0.80	6.80
RO..I	39	1"	39M	M32x1,5	161	115	9.5	27	146	100	65	85	0.414	4.40	125÷175	165÷215	100÷150	0.60÷0.80	6.80
RO..I	59	1.1/2"	59M	M50x1,5	161	115	9.5	27	146	100	65	85	0.414	4.40	125÷175	165÷215	100÷150	0.60÷0.80	6.80
RO..I	69	2"	69M	M63x1,5	161	115	9.5	27	146	100	65	85	0.414	4.40	125÷175	165÷215	100÷150	0.60÷0.80	6.80

Example: ROXI 36A/115 ...

Order Coding

Type			Entries Size and Threading	Body Size		Internal height (only with extension see h)	Model
RO	X	I	3 = 1''	6A	/ /	115	...

EXTERNAL BRACKET KF

Material: Stainless Steel AISI 316 completed with Class A4-70 screws in Stainless Steel.

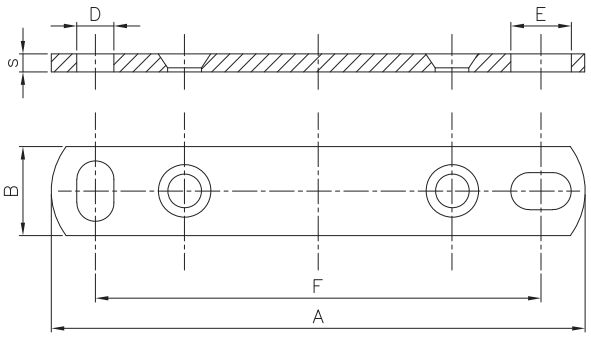

Code	Dimensions (mm)						Weight (g)
	A	B	s	D	E	F	
KFI4	105	18	3	6.5	10	87	41
KFI6	126	18	3	6.5	10	108	50
KFI7	142	18	3	6.5	10	124	57
KFI8	158	20	4	8.5	12	138	92
KFI9	174	20	4	8.5	12	154	103

EXTERNAL BRACKET KE 46S

Material: Stainless Steel AISI 316 completed with Class A4-70 screws in Stainless Steel.

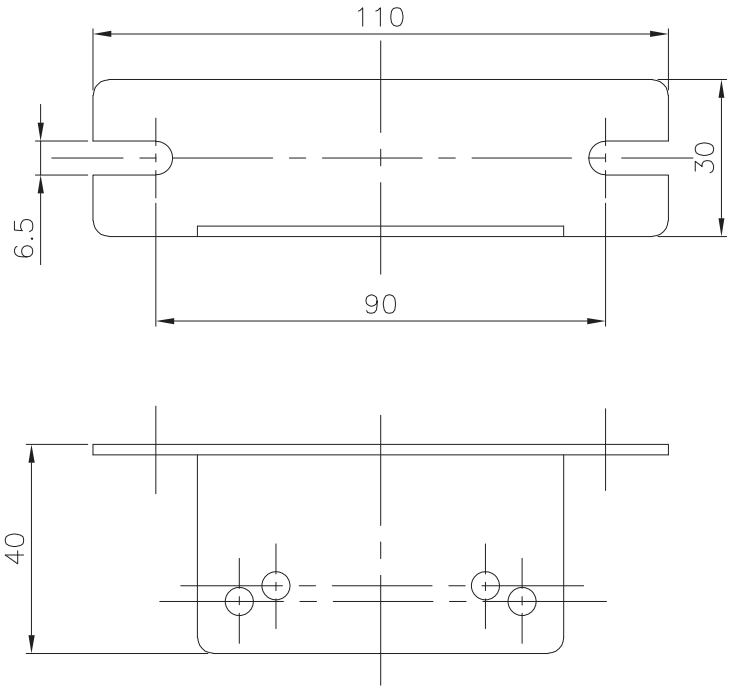

INTERNAL MOUNTING PLATE KS

Options

Material: Aluminum (code ..A) or Stainless Steel AISI 316L (code ..S)
Completed with screws for fixing. Ideal for terminal block type MH.

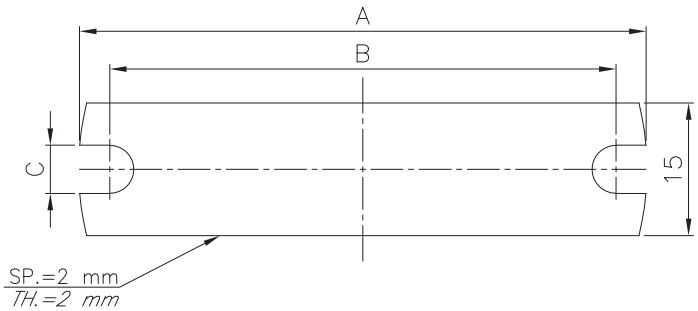

Code	Dimensions (mm)		
	A	B	C
KS4..	52	42	4.5
KS6..	71	62	4.5
KS7..	90	76	4.5
KS8..	100	82	5.5
KS9..	110	98	5.5

ACCESSORIES

INTERNAL MOUNTING PLATE TS

Material: Zinc plated Steel (G).
Completed with screws for fixing. Ideal for terminal block type MM.

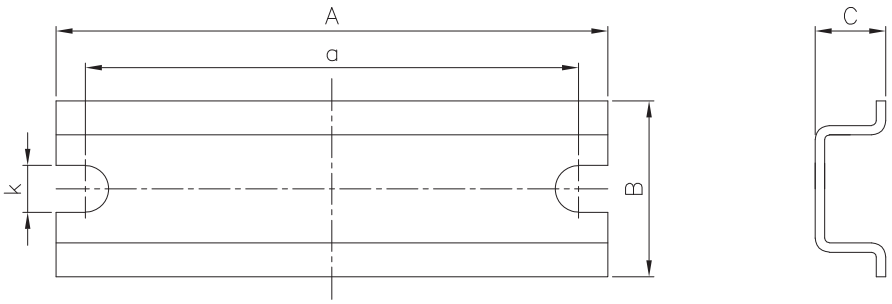

Enclosure	TS15			TS35			TS32			a (mm)	k (mm)
	A	B	C	A	B	C	A	B	C		
RI..4	51	15	5.5	N.A.	N.A.	N.A.	N.A.	N.A.	N.A.	42	4.5
RI..6	71	15	5.5	N.A.	N.A.	N.A.	N.A.	N.A.	N.A.	62	4.5
RI..6A	71	15	5.5	N.A.	N.A.	N.A.	N.A.	N.A.	N.A.	62	4.5
RI..7	90	15	5.5	N.A.	N.A.	N.A.	N.A.	N.A.	N.A.	76	5.5
RI..8	N.A.	N.A.	N.A.	100	35	7.5 / 15	100	32	15	82	5.5
RI..9	N.A.	N.A.	N.A.	110	35	7.5 / 15	110	32	15	98	5.5

BRACKET FOR DIN 43700 KH

Material: Zinc plated Steel (G).

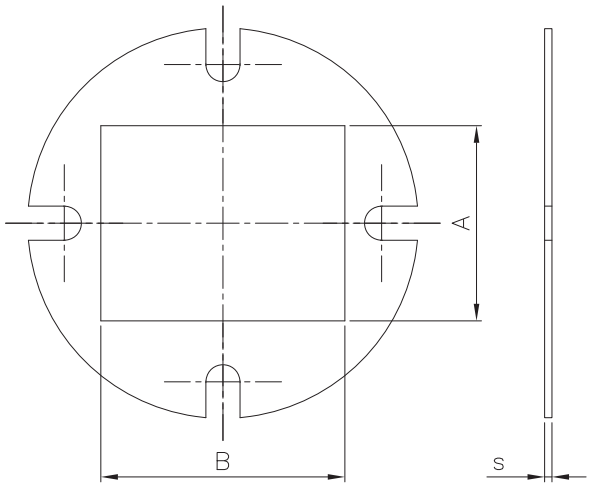

Code	DIN 47300	Dimensions (mm)		
		A	B	s
KH6-3636	**36x36**	33	33	1.5
KH6-4824	**48x24**	45	22.2	1.5
KH7-4848	**48x48**	45	45	1.5
KH8-7236	**72x36**	68	33	1.5
KH8-7272	**72x72**	68	68	1.5
KH9-9624	**96x24**	92	22.2	1.5
KH9-9648	**96x48**	92	45	1.5

MAX DISSIPATED POWER and TEMPERATURE CLASS RELATED to AMBIENT TEMPERATURE

series RI ROI

ENCLOSURE	MAX. AMBIENT TEMPERATURE	MAX. DISSIPATED POWER	TEMPERATURE CLASS	MAXIMUM SURFACE TEMPERATURE	CABLE ENTRY POINT TEMPERATURE	O-RING TYPE
R..I..4 R..I..4/.. RO..I..4 RO..I..4/..	40°C	7,5 W	T6	T85°C	80°C	EPDM / SILICONE
	50°C	5,5 W				
	60°C	3,0 W				
	70°C	1,0 W				
	40°C	11,0 W	T5	T100°C	95°C	EPDM / SILICONE
	50°C	8,5 W				
	60°C	6,0 W				
	70°C	4,5 W				
	85°C	1,0 W				
	40°C	19,5 W	T4	T135°C	130°C	SILICONE
	50°C	17,0 W				
	60°C	14,0 W				
	70°C	12,0 W				
	85°C	8,5 W				
R..I..6 R..I..6/.. RO..I..6 RO..IO..6/..	40°C	8,0 W	T6	T85°C	80°C	EPDM / SILICONE
	50°C	5,5 W				
	60°C	3,0 W				
	70°C	1,0 W				
	40°C	11,5 W	T5	T100°C	95°C	EPDM / SILICONE
	50°C	9,0 W				
	60°C	6,5 W				
	70°C	4,5 W				
	85°C	1,0 W				
	40°C	20,5 W	T4	T135°C	130°C	SILICONE
	50°C	18,0 W				
	60°C	15,0 W				
	70°C	12,5 W				
	85°C	9,0 W				
R..I..7 R..I..7/.. RO..I..7 RO..I..7/..	40°C	10,0 W	T6	T85°C	80°C	EPDM / SILICONE
	50°C	7,0 W				
	60°C	4,0 W				
	70°C	1,5 W				
	40°C	15,0 W	T5	T100°C	95°C	EPDM / SILICONE
	50°C	11,5 W				
	60°C	8,5 W				
	70°C	5,0 W				
	85°C	1,5 W				
	40°C	30,0 W	T4	T135°C	130°C	SILICONE
	50°C	26,0 W				
	60°C	21,0 W				
	70°C	17,0 W				
	85°C	11,5 W				
R..I..8 R..I..8/.. RO..I..8 RO..I..8/..	40°C	11,0 W	T6	T85°C	80°C	EPDM / SILICONE
	50°C	7,5 W				
	60°C	4,5 W				
	70°C	2,0 W				
	40°C	16,0 W	T5	T100°C	95°C	EPDM / SILICONE
	50°C	12,5 W				
	60°C	9,0 W				
	70°C	6,0 W				
	85°C	2,0 W				
	40°C	31,0 W	T4	T135°C	130°C	SILICONE
	50°C	27,0 W				
	60°C	22,0 W				
	70°C	18,0 W				
	85°C	12,5 W				
R..I..9 R..I..9/.. RO..I..9 RO..I..9/..	40°C	14,0 W	T6	T85°C	80°C	EPDM / SILICONE
	50°C	10,0 W				
	60°C	6,0 W				
	70°C	2,5 W				
	40°C	21,0 W	T5	T100°C	95°C	EPDM / SILICONE
	50°C	16,0 W				
	60°C	12,0 W				
	70°C	8,0 W				
	85°C	2,5 W				
	40°C	42,0 W	T4	T135°C	130°C	SILICONE
	50°C	35,0 W				
	60°C	29,0 W				
	70°C	24,0 W				
	85°C	16,0 W				

I

TYPES of EQUIPMENT / INSTRUMENTS to be HOUSED inside the BOXES

serie RI ROI

DESCRIPTION	MOD. (°)
• Ammeter	A
• Analogic to digital signal converter	ADC
• Insulation controller	CI
• Electrical hours counter	CO
• Pulse counter	CP
• Digital to analogic signal converter	DAC
• LCD indicator panel	DE
• Frequency meter	F
• Single phase power factor meter	FM
• Three phase power factor meter	FT
• Twilight switch	IC
• Strain gauge signals converter	ICA
• Clock switch, hourly, daily, weekly programmable	IO
• Single phase overload voltage	LVM
• Three phase overload voltage	LVT
• Phase insulation meter	MI
• Multifunction meter	MM
• Electronic digital clock	O
• Cyclic programmer	PC
• Electronic digital programmer	PE
• Modular fuse bases for fuses up to Ø10.3x38	PF
• Control relay	RC
• Step relay	RP
• Electronic timer relay	RT
• Control, measuring and regulation electronic board	SCM
• Light sensor	SL
• Camera	TL
• Electromechanically, electronic, analogic and digital timers	TP
• Electronic thermoregulator	TR
• Wattmeter	W

I

NOTES

- Max supply voltage: 660 VAC / 440 VDC.
- All the electrical equipment shall conform to their respective IEC/CENELEC standards regarding their nominal characteristics and operating mode. Furthermore, they must have dimensions as to ensure that, in any cross-section, at least 40% of the surface is free.
- Maximum dissipated power shall be in accordance to table reported on page I9.
- A circuit breakers or contactors containing oil filling and apparatus producing turbulences are not allowed to be installed inside the enclosure.
- The equipment must be installed to avoid a risk from propagating brush discharges.
- Electrical equipment contained in the enclosure shall neither be intrinsically safe nor include capillaries or other non electric connections.
- In case of presence of capacitors, when the voltage goes off they must be discharged within their own circuit in less than one second.
- When the device is use for Group I (mines), insulating material subject to electrical stresses capable of causing arc in air and which result from rated currents of more than 16 A shall have a comparative tracking index equal to or greater than CTI 400 M, according to IEC 60112.

(°) I.D. on the external plate.