INSPECTABLE BENDS

series **LBH**

Protection		Zone			
Gas		1-2	II2G	Ex d IIB
Dusts		n.a.	n.a.	n.a.

Degree of Protection: **IP66**

Amb. Temp.: Standard **-20°C +40°C** | Extended **-20°C +60°C**

Entries Threading: **EN 10226 (Gk)**

Material: **Aluminum light alloy**

Standards and Certificates: **Directive 2014/34/EU (ATEX)** | **EN 60079-0 • EN 60079-1** | **U** **CESI 03 ATEX 141U**

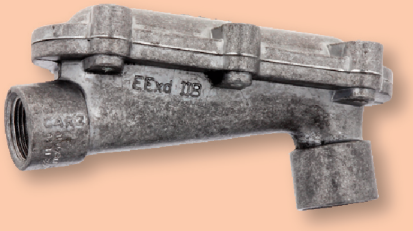

- Recommended for positioning and bending of large conductors.
- Tangent lid opening to facilitate inspection operations.
- The series LBH is recommended for small section conductor bundles.
- Galvanized steel screws.

Options - Threading NPT ANSI B1.20.1 (N)

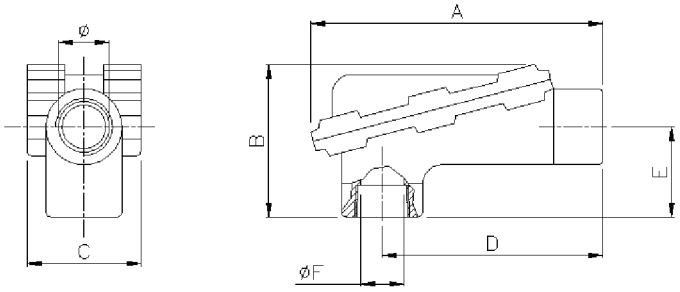

Code	Dimensions (mm)							Weight (g)
	Ø	A	B	C	D	E	ØF	
LBH 2	3/4"	160	95	70	132	45	19	410
LBH 3	1"	165	112	70	129	60	25	470
LBH 5	1.1/2"	265	133	110	217	81	38	1170
LBH 6	2"	266	133	110	217	81	48	1045
LBH 7	2.1/2"	363	250	138	267	138	62	3510
LBH 8	3"	363	250	138	267	138	70	3160
LBH 9	4"	710	280	185	600	160	90	9870

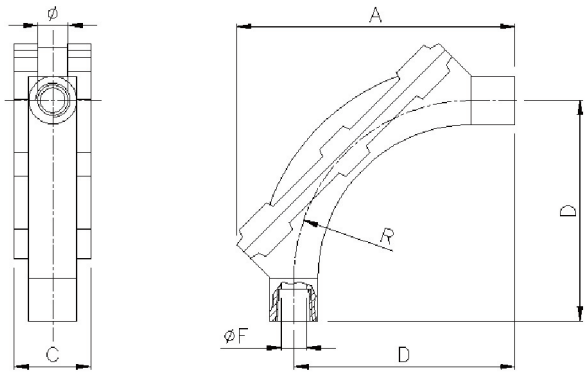

Code	Dimensions (mm)						Weight (g)
	Ø	A	C	D	ØF	R	
LBHS 3	1"	245	74	236	25	200	1285
LBHS 5	1.1/2"	285	103	280	38	250	1480
LBHS 6	2"	440	117	380	48	360	2285
LBHS 7	2.1/2"	440	145	350	62	320	6230
LBHS 8	3"	632	150	550	70	500	6770