THREE PIECE UNIONS

series **B**

Protection		Zone			
Gas		1-2	II2G	Ex d IIB Gb
Dusts		21-22	II2D	Ex tb IIIC Db

Degree of Protection	IP66/67

Amb. Temp.			
Standard	-20°C	+40°C
Extended	-55°C	+60°C

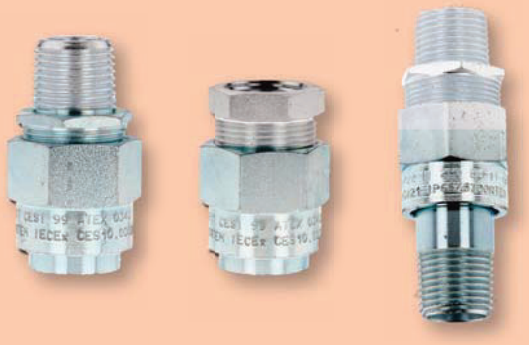

Entries Threading	EN 10226 (Gk)

Material	Zinc plated Steel

Standards and Certificates

- Directive 2014/34/EU (ATEX)
- EN 60079 - 0 • EN 60079 - 1
  EN 60079 - 31
- CESI 99 ATEX 034U
- IEC 60079 - 0 • IEC 60079 - 1
  IEC 60079 - 31
- IECEx CES 10.0002U

- Unions consisting of three elements independently screwed one into the other allowing the connection between rigid parts.
- These unions take the same temperature class of the enclosure where they are installed on.

Options

- Available version series R... for gas group IIC with following gas protection mode: Ex d IIC Gb.
- Threading NPT ANSI B1.20.1 (N) or Metric ISO 262 (M).
- Material: Stainless Steel AISI 316.

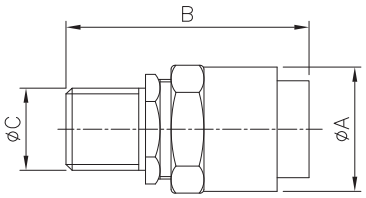

BMF-RMF: Male / Female

Code	Dimensions (mm)					Weight (g)	
	Ø	ØA	B-IIB	B-IIC	ØC	IIB	IIC
BMF-RMF 1	1/2"	35	62	74	13	225	270
BMF-RMF 2	3/4"	40	62	74	19	275	350
BMF-RMF 3	1"	50	74	84	24	380	480
BMF-RMF 4	1.1/4"	61	80	-	32	700	840
BMF-RMF 5	1.1/2"	70	80	86	38	970	1225
BMF-RMF 6	2"	82	88	86	48	1290	1600
BMF-RMF 7	2.1/2"	105	100	-	64	2180	2700
BMF-RMF 8	3"	122	100	-	78	2850	3500
BMF-RMF 9	4"	144	114	-	90	-	-

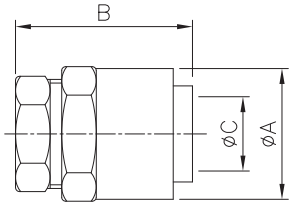

BFF-RFF: Female / Female

Code	Dimensions (mm)					Weight (g)	
	Ø	ØA	B-IIB	B-IIC	ØC	IIB	IIC
BFF-RFF 1	1/2"	35	48	60	13	180	225
BFF-RFF 2	3/4"	40	48	60	19	240	315
BFF-RFF 3	1"	50	52	64	24	290	390
BFF-RFF 4	1.1/4"	61	56	-	32	550	890
BFF-RFF 5	1.1/2"	70	62	64	38	840	1090
BFF-RFF 6	2"	82	65	64	48	1130	1430
BFF-RFF 7	2.1/2"	105	68	-	64	1800	2350
BFF-RFF 8	3"	122	73	-	78	2250	2900
BFF-RFF 9	4"	144	86	-	90	-	-

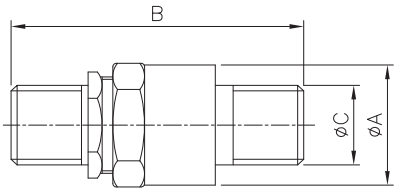

BMM-RMM: Male / Male

Code	Dimensions (mm)					Weight (g)	
	Ø	ØA	B-IIB	B-IIC	ØC	IIB	IIC
BMM-RMM 1	1/2"	35	80	-	13	250	300
BMM-RMM 2	3/4"	40	80	-	19	330	410
BMM-RMM 3	1"	50	97	-	24	475	580
BMM-RMM 5	1.1/2"	70	107	-	38	1100	1350
BMM-RMM 6	2"	82	112	-	48	1540	1850

NOTES

- Ambient temperature lower than -20°C is available only with Stainless Steel unions.
- Model RB... allows an extended ambient temperature up to +150°C.

REDUCERS

series **RE**

Protection		Zone			
Gas		1-2	II2G	Ex d IIC Gb / Ex e IIC Gb
Dusts		21-22	II2D	Ex tb IIIC Db

Degree of Protection	IP66

Amb. Temp.				
Standard	-40°C	+100°C
Extended	-60°C	+180°C

Entries Threading	NPT ANSI B1.20 or Metric ISO 262
Material	Nickel plated Brass

Standards and Certificates

- Directive 2014/34/EU (ATEX)
- EN 60079 - 0 • EN 60079 - 1
  EN 60079 - 7 • EN 60079 - 31
- CE INERIS 14 ATEX 0029X
- IECEx
  IEC 60079 - 0 • IEC 60079 - 1
  IEC 60079 - 7 • IEC 60079 - 31
- IECEx INE 14.0038X

Options

- Material: Stainless Steel AISI 316L ("S") on request.
- Sizes greater than 3".
- Different threadings.

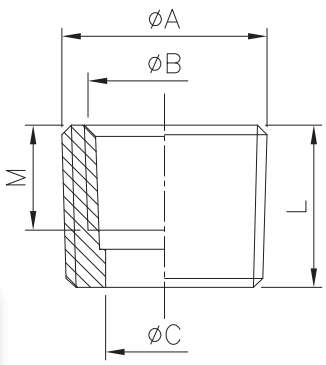

Code	ØA [NPT]	ØB [NPT]	Dimensions (mm) ØC	L	M	Weight (g)
RE 138	1/2"	3/8"	10	19	16	30
RE 21	3/4"	1/2"	13	21	18	50
RE 31	1"	1/2"	13	21	18	110
RE 32	1"	3/4"	19	21	18	75
RE 43	1.1/4"	1"	25	27	23	160
RE 54	1.1/2"	1.1/4"	32	27	23	150
RE 65	2"	1.1/2"	38	27	23	300
RE 76	2.1/2"	2"	50	27	23	380
RE 87	3"	2.1/2"	60	35	31	750

ØA (MALE) [NPT]	ØB (FEMALE) [NPT] 3/8"	1/2"	3/4"	1"	1.1/4"	1.1/2"	2"	2.1/2"
1/2"	■	X	X	X	X	X	X	X
3/4"	□	■	X	X	X	X	X	X
1"	□	■	■	X	X	X	X	X
1.1/4"	□	□	□	■	X	X	X	X
1.1/2"	□	□	□	□	■	X	X	X
2"	□	□	□	□	□	■	X	X
2.1/2"	□	□	□	□	□	□	□	X
3"	□	□	□	□	□	□	□	□

■ = available □ = available on request X = not available

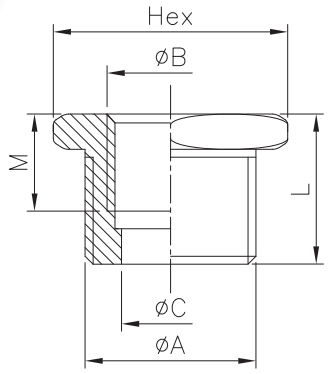

Code	ØA [ISO]	ØB [ISO]	Dimensions (mm) ØC	L	M	Hex	Weight (g)
RE 2016	M20x1,5	M16x1,5	10	20	16	26	35
RE 2520	M25x1,5	M20x1,5	13	21	17	30	55
RE 3220	M32x1,5	M20x1,5	13	21	17	38	115
RE 3225	M32x1,5	M25x1,5	19	21	17	38	90
RE 4032	M40x1,5	M32x1,5	25	24	19	46	150
RE 5040	M50x1,5	M32x1,5	32	24	19	56	200
RE 6350	M63x1,5	M40x1,5	42	25	19	70	350
RE 7563	M75x1,5	M50x1,5	55	28	21	82	450
RE 9075	M90x1,5	M63x1,5	65	30	23	98	700

ØA (MALE) [ISO]	ØB (FEMALE) [ISO] M16	M20	M25	M32	M40	M50	M63	M75
M20	■	X	X	X	X	X	X	X
M25	□	■	X	X	X	X	X	X
M32	□	■	■	X	X	X	X	X
M40	□	□	□	■	X	X	X	X
M50	□	□	□	□	■	X	X	X
M63	□	□	□	□	□	■	X	X
M75	□	□	□	□	□	□	□	X
M90	□	□	□	□	□	□	□	□

■ = available □ = available on request X = not available

NOTES

- Extended operating temperature range is -40°C ÷ +100°C with EPDM O-ring.
- Extended operating temperature range is -60°C ÷ +180°C with Silicone O-ring.
- The fitting may be mounted on electrical equipment suitable for group IM2 (firedamp mines) if it is not made of Aluminum light alloy. The resulting mode of protection will be: Ex d I Mb.

Order COding

Example: RE32S

Type	Size and Threading (Male)	Size and Threading (Female)	Material
RE	1/2/3/4/5/6 = NPT ANSI B1.20	38/1/2/3/4/5 = NPT ANSI B1.20	B = Nickel plated Brass
	20/25/32/40/50/63/75/90 = Metric ISO 262	16/20/25/32/40/50/63/75 = Metric ISO 262	S = Stainless Steel AISI 316L

ADAPTERS

series **RE**

Protection		Zone			
Gas		1-2	II2G	Ex d IIC Gb / Ex e IIC Gb
Dusts		21-22	II2D	Ex tb IIIC Db

Degree of Protection	IP66

Amb. Temp.				
Standard	-40°C		+100°C
Extended	-60°C		+180°C

Entries Threading	NPT ANSI B1.20 or Metric ISO 262
Material	Nickel plated Brass

Standards and Certificates

- Directive 2014/34/EU (ATEX)
- EN 60079 - 0 • EN 60079 - 1
  EN 60079 - 7 • EN 60079 - 31
- CE INERIS 14 ATEX 0029X
- IEC 60079 - 0 • IEC 60079 - 1
  IEC 60079 - 7 • IEC 60079 - 31
- IECEx INE 14.0038X

Options

- Material: Stainless Steel AISI 316L ("S") on request.
- Sizes greater than 3".

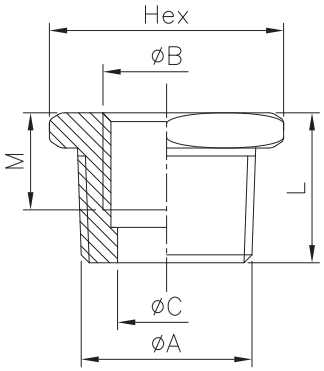

Code	ØA [NPT]	ØB [ISO]	Dimensions (mm) ØC	L	M	Hex	Weight (g)
RE 1N16M	1/2"	M16x1,5	10	22	18	22	40
RE 2N20M	3/4"	M20x1,5	13	23	19	28	60
RE 3N20M	1"	M20x1,5	13	28	21	35	150
RE 3N25M	1"	M25x1,5	19	28	21	35	110
RE 4N32M	1.1/4"	M32x1,5	25	29	21	44	180
RE 5N40M	1.1/2"	M40x1,5	32	29	21	50	190
RE 6N50M	2"	M50x1,5	42	30	21	62	300
RE 7N63M	2.1/2"	M63x1,5	55	38	21	74	460
RE 8N75M	3"	M75x1,5	65	40	25	90	780

ØA (MALE) [NPT]	ØB (FEMALE) [ISO] M16	M20	M25	M32	M40	M50	M63	M75
1/2"	■	X	X	X	X	X	X	X
3/4"	□	■	X	X	X	X	X	X
1"	□	■	■	X	X	X	X	X
1.1/4"	□	□	□	■	X	X	X	X
1.1/2"	□	□	□	□	■	X	X	X
2"	□	□	□	□	□	■	X	X
2.1/2"	□	□	□	□	□	□	□	X
3"	□	□	□	□	□	□	□	□

■ = available □ = available on request X = not available

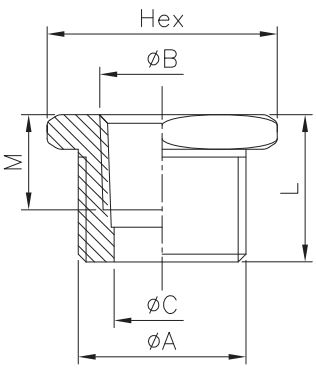

Code	ØA [ISO]	ØB [NPT]	Dimensions (mm) ØC	L	M	Hex	Weight (g)
RE 20M38N	M20x1,5	3/8"	10	20	16	26	35
RE 25M1N	M25x1,5	1/2"	13	20	18	30	55
RE 32M1N	M32x1,5	1/2"	13	22	18	38	120
RE 32M2N	M32x1,5	3/4"	19	22	18	38	90
RE 40M3N	M40x1,5	1"	25	24	23	46	180
RE 50M4N	M50x1,5	1.1/4"	32	24	23	56	250
RE 63M5N	M63x1,5	1.1/2"	38	24	23	70	450
RE 75M6N	M75x1,5	2"	50	28	23	82	600
RE 90M7N	M90x1,5	2.1/2"	60	28	31	98	1000

ØA (MALE) [ISO]	ØB (FEMALE) [NPT] 3/8"	1/2"	3/4"	1"	1.1/4"	1.1/2"	2"	2.1/2"
M20	■	X	X	X	X	X	X	X
M25	□	■	X	X	X	X	X	X
M32	□	■	■	X	X	X	X	X
M40	□	□	□	■	X	X	X	X
M50	□	□	□	□	■	X	X	X
M63	□	□	□	□	□	■	X	X
M75	□	□	□	□	□	□	□	X
M90	□	□	□	□	□	□	□	□

■ = available □ = available on request X = not available

NOTES

- Extended operating temperature range is -40°C ÷ +100°C with EPDM O-ring.
- Extended operating temperature range is -60°C ÷ +180°C with Silicone O-ring.
- The fitting may be mounted on electrical equipment suitable for group IM2 (firedamp mines) if it is not made of Aluminum light alloy. The resulting mode of protection will be: Ex d I Mb.

Order Coding

Example: RE75M3NB

Type	Size and Threading (Male)	Threading Identification (Male)	Size and Threading (Female)	Threading Identification (Female)	Material
RE	1/2/3/4/5/6/7/8 = NPT ANSI B1.20 20/25/32/40/50/63/75/90 = Metric ISO 262	N = NPT ANSI B1.20 M = Metric ISO 262	16/20/25/32/40/50/63/75 = Metric ISO 262 1/2/3/4/5/6/7 = NPT ANSI B1.20	M = Metric ISO 262 N = NPT ANSI B1.20	B = Nickel plated Brass S = Stainless Steel AISI 316L

H

REDUCERS

series **REB**

Protection		Zone			
Gas		1-2	II2G	Ex d IIC Gb / Ex e IIC Gb
Dusts		21-22	II2D	Ex tb IIIC Db

Degree of Protection	IP66

Amb. Temp.				
Standard	-40°C	+100°C
Extended	-60°C	+180°C

Entries Threading	NPT ANSI B1.20 or Metric ISO 262

Material	Nickel plated Brass

Standards and Certificates

- Directive 2014/34/EU (ATEX)
- EN 60079 - 0 • EN 60079 - 1
- EN 60079 - 7 • EN 60079 - 31
- CE INERIS 14 ATEX 0029X
- IECEx: IEC 60079 - 0 • IEC 60079 - 1
- IEC 60079 - 7 • IEC 60079 - 31
- IECEx INE 14.0038X

Options

- Material: Stainless Steel AISI 316L ("S") on request.
- Sizes greater than 3".
- Different threadings.

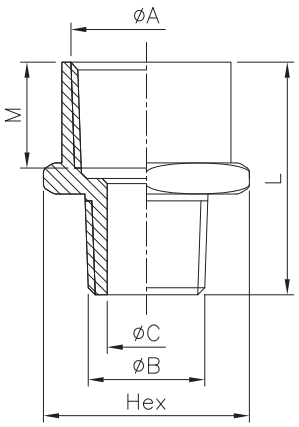

Code	ØA [NPT]	ØB [NPT]	Dimensions (mm) ØC	L	M	Hex	Weight (g)
REB 138	1/2"	3/8"	10	38	18	24	60
REB 21	3/4"	1/2"	13	40	18	30	90
REB 31	1"	1/2"	13	45	23	38	150
REB 32	1"	3/4"	19	45	23	38	150
REB 43	1.1/4"	1"	25	50	23	48	240
REB 54	1.1/2"	1.1/4"	32	50	23	52	260
REB 65	2"	1.1/2"	38	50	23	64	330
REB 76	2.1/2"	2"	50	60	31	78	620
REB 87	3"	2.1/2"	60	67	31	94	920

ØA (FEMALE) [NPT]	ØB (MALE) [NPT] 3/8"	1/2"	3/4"	1"	1.1/4"	1.1/2"	2"	2.1/2"
1/2"	■	X	X	X	X	X	X	X
3/4"	□	■	X	X	X	X	X	X
1"	□	■	■	X	X	X	X	X
1.1/4"	□	□	□	■	X	X	X	X
1.1/2"	□	□	□	□	■	X	X	X
2"	□	□	□	□	□	■	X	X
2.1/2"	□	□	□	□	□	□	□	X
3"	□	□	□	□	□	□	□	□

■ = available □ = available on request X = not available

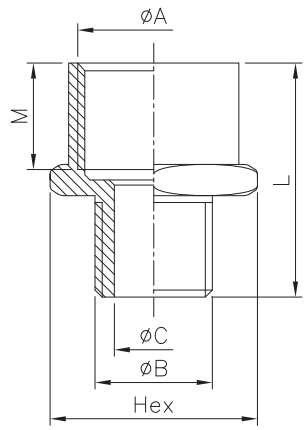

Code	ØA [ISO]	ØB [ISO]	Dimensions (mm) ØC	L	M	Hex	Weight (g)
REB 2016	M20x1,5	M16x1,5	10	38	17	27	75
REB 2520	M25x1,5	M20x1,5	13	38	17	30	80
REB 3220	M32x1,5	M20x1,5	13	38	17	38	120
REB 3225	M32x1,5	M25x1,5	19	38	17	38	120
REB 4032	M40x1,5	M32x1,5	25	40	19	46	160
REB 5040	M50x1,5	M32x1,5	32	42	19	56	230
REB 6350	M63x1,5	M40x1,5	42	42	19	70	320
REB 7563	M75x1,5	M50x1,5	55	44	21	82	410
REB 9075	M90x1,5	M63x1,5	65	46	21	98	600

ØA (FEMALE) [ISO]	ØB (MALE) [ISO] M16	M20	M25	M32	M40	M50	M63	M75
M20	■	X	X	X	X	X	X	X
M25	□	■	X	X	X	X	X	X
M32	□	■	■	X	X	X	X	X
M40	□	□	□	■	X	X	X	X
M50	□	□	□	□	■	X	X	X
M63	□	□	□	□	□	■	X	X
M75	□	□	□	□	□	□	□	X
M90	□	□	□	□	□	□	□	□

■ = available □ = available on request X = not available

NOTES

- Extended operating temperature range is -40°C ÷ +100°C with EPDM O-ring.
- Extended operating temperature range is -60°C ÷ +180°C with Silicone O-ring.
- The fitting may be mounted on electrical equipment suitable for group IM2 (firedamp mines) if it is not made of Aluminum light alloy. The resulting mode of protection will be: Ex d I Mb.

Order COding

Example: REB32S

Type	Size and Threading (Female)	Size and Threading (Male)	Material
REB	1/2/3/4/5/6 = NPT ANSI B1.20	38/1/2/3/4/5 = NPT ANSI B1.20	B = Nickel plated Brass
	20/25/32/40/50/63/75/90 = Metric ISO 262	16/20/25/32/40/50/63/75 = Metric ISO 262	S = Stainless Steel AISI 316L

ADAPTERS

series **REB**

Protection		Zone			
Gas		1-2	II2G	Ex d IIC Gb / Ex e IIC Gb
Dusts		21-22	II2D	Ex tb IIIC Db

Degree of Protection	IP66

Amb. Temp.			
Standard	-40°C		+100°C
Extended	-60°C		+180°C

Entries Threading	NPT ANSI B1.20 or Metric ISO 262
Material	Nickel plated Brass

Standards and Certificates

- Directive 2014/34/EU (ATEX)
- EN 60079 - 0 • EN 60079 - 1
  EN 60079 - 7 • EN 60079 - 31
- CE INERIS 14 ATEX 0029X
- IEC 60079 - 0 • IEC 60079 - 1
  IEC 60079 - 7 • IEC 60079 - 31
- IECEx INE 14.0038X

Options

- Material: Stainless Steel AISI 316L ("S") on request.
- Sizes greater than 3".
- Different threadings.

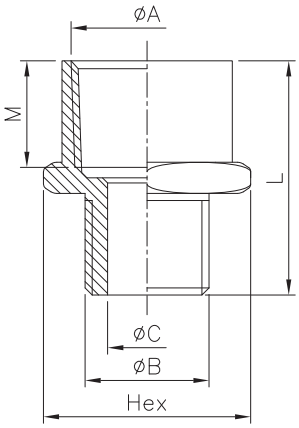

Code	ØA [NPT]	ØB [ISO]	Dimensions (mm) ØC	L	M	Hex	Weight (g)
REB 38N16M	3/8"	M16x1,5	10	37	16	24	68
REB 1N20M	1/2"	M20x1,5	13	39	18	27	80
REB 2N20M	3/4"	M20x1,5	13	39	18	30	80
REB 3N20M	1"	M20x1,5	13	44	23	38	150
REB 2N25M	3/4"	M25x1,5	19	39	18	30	80
REB 3N25M	1"	M25x1,5	19	44	23	38	150
REB 3N32M	1"	M32x1,5	25	44	23	38	150
REB 4N40M	1.1/4"	M40x1,5	32	46	23	48	240
REB 5N50M	1.1/2"	M50x1,5	38	46	23	56	360
REB 6N63M	2"	M63x1,5	50	46	23	70	520
REB 7N75M	2.1/2"	M75x1,5	60	56	31	82	830

ØA (FEMALE) [NPT]	ØB (MALE) [ISO] M16	M20	M25	M32	M40	M50	M63	M75
3/8"	■	X	X	X	X	X	X	X
1/2"	□	■	X	X	X	X	X	X
3/4"	□	■	■	X	X	X	X	X
1"	□	■	■	■	X	X	X	X
1.1/4"	□	□	□	□	■	X	X	X
1.1/2"	□	□	□	□	□	■	X	X
2"	□	□	□	□	□	□	■	X
2.1/2"	□	□	□	□	□	□	□	□
3"	□	□	□	□	□	□	□	□

■ = available □ = available on request X = not available

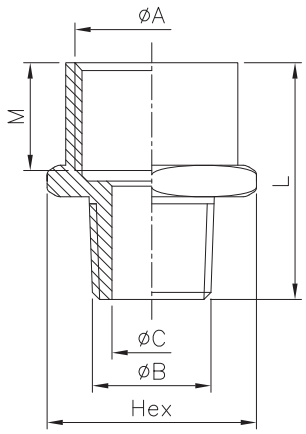

Code	ØA [ISO]	ØB [NPT]	Dimensions (mm) ØC	L	M	Hex	Weight (g)
REB 16M38N	M16x1,5	3/8"	10	38	17	22	58
REB 20M1N	M20x1,5	1/2"	13	40	17	27	80
REB 25M1N	M25x1,5	1/2"	13	40	17	30	80
REB 32M1N	M32x1,5	1/2"	13	40	17	38	120
REB 25M2N	M25x1,5	3/4"	19	40	17	30	90
REB 32M2N	M32x1,5	3/4"	19	40	17	38	130
REB 32M3N	M32x1,5	1"	25	45	17	38	150
REB 40M4N	M40x1,5	1.1/4"	32	47	19	46	220
REB 50M5N	M50x1,5	1.1/2"	38	47	19	56	270
REB 63M6N	M63x1,5	2"	50	47	19	70	370
REB 75M7N	M75x1,5	2.1/2"	60	56	21	82	600

ØA (FEMALE) [ISO]	ØB (MALE) [NPT] 3/8"	1/2"	3/4"	1"	1.1/4"	1.1/2"	2"	2.1/2"
M16	■	X	X	X	X	X	X	X
M20	□	■	X	X	X	X	X	X
M25	□	■	■	X	X	X	X	X
M32	□	■	■	■	X	X	X	X
M40	□	□	□	□	■	X	X	X
M50	□	□	□	□	□	■	X	X
M63	□	□	□	□	□	□	■	X
M75	□	□	□	□	□	□	□	□
M90	□	□	□	□	□	□	□	□

■ = available □ = available on request X = not available

NOTES

- Extended operating temperature range is -40°C ÷ +100°C with EPDM O-ring.
- Extended operating temperature range is -60°C ÷ +180°C with Silicone O-ring.
- The fitting may be mounted on electrical equipment suitable for group IM2 (firedamp mines) if it is not made of Aluminum light alloy. The resulting mode of protection will be: Ex d I Mb.

Order Coding

Example: REB32M2NB

Type	Size and Threading (Female)	Threading Identification (Female)	Size and Threading (Male)	Threading Identification (Male)	Material
REB	38/1/2/3/4/5/6/7/8 = NPT ANSI B1.20 16/20/25/32/40/50/63/75/90 = Metric ISO 262	N = NPT ANSI B1.20 M = Metric ISO 262	16/20/25/32/40/50/63/75/90 = Metric ISO 262 38/1/2/3/4/5/6/7/8 = NPT ANSI B1.20	M = Metric ISO 262 N = NPT ANSI B1.20	B = Nickel plated Brass S = Stainless Steel AISI 316L

H

NIPPLES

series **NP**

Protection		Zone			
Gas		1-2	II2G	Ex d IIC Gb / Ex e IIC Gb
Dusts		21-22	II2D	Ex tb IIIC Db

Degree of Protection	IP66

Amb. Temp.	Standard	-20°C	+80°C
	Extended	-60°C	+180°C

Entries Threading	NPT ANSI B1.20 or Metric ISO 262
Material	Nickel plated Brass

Standards and Certificates

- Directive 2014/34/EU (ATEX)
- EN 60079 - 0 • EN 60079 - 1
- EN 60079 - 7 • EN 60079 - 31
- CE INERIS 14 ATEX 0029X
- IECEx: IEC 60079 - 0 • IEC 60079 - 1
- IEC 60079 - 7 • IEC 60079 - 31
- IECEx INE 14.0038X

- Nipples of series NP are used for linking enclosures or other fittings with female threading.

Options

- Materials: Stainless Steel AISI 316L ("S") on request.
- Size greater than 3".

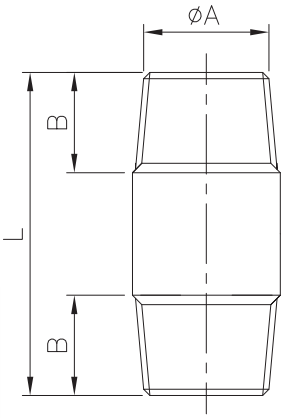

Code	Dimensions (mm)			Weight (g)
	ØA	B	L	
NP 38	3/8" NPT	16	40	40
NP 1	1/2" NPT	18	50	60
NP 2	3/4" NPT	18	50	80
NP 3	1" NPT	23	60	120
NP 4	1.1/4" NPT	23	60	160
NP 5	1.1/2" NPT	23	60	180
NP 6	2" NPT	23	60	230
NP 7	2.1/2" NPT	28	70	320
NP 8	3" NPT	28	70	390

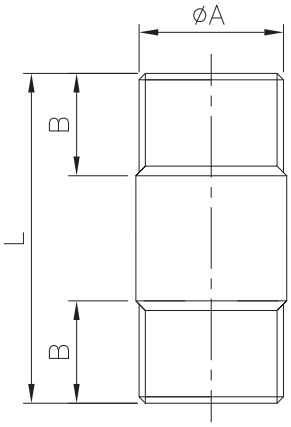

Code	Dimensions (mm)			Weight (g)
	ØA	B	L	
NP 16	M16x1.5	16	40	40
NP 20	M20x1.5	16	50	70
NP 25	M25x1.5	16	50	80
NP 32	M32x1.5	16	60	130
NP 40	M40x1.5	18	60	170
NP 50	M50x1.5	18	60	210
NP 63	M63x1.5	18	60	270
NP 75	M75x1.5	20	70	320
NP 90	M90x1.5	20	70	460

NOTES

- Extended operating temperature range is -40°C ÷ +100°C with EPDM O-ring.
- Extended operating temperature range is -60°C ÷ +180°C with Silicone O-ring.
- The fitting may be mounted on electrical equipment suitable for group IM2 (firedamp mines) if it is not made of Aluminum light alloy. The resulting mode of protection will be: Ex d I Mb.

Order COding

Example: NP25S

Type	Size and Threading	Material
NP	**38/1/2/3/4/5/6/7/8** = NPT ANSI B1.20	**B** = Nickel plated Brass
	16/20/25/32/40/50/63/75/90 = Metric ISO 262	**S** = Stainless Steel AISI 316L

COUPLINGS

series **EM**

Protection		Zone			
Gas		1-2	II2G	Ex d IIC Gb / Ex e IIC Gb
Dusts		21-22	II2D	Ex tb IIIC Db

Degree of Protection	IP66

Amb. Temp.			
Standard	-20°C	+40°C
Extended	-60°C	+180°C

Entries Threading	NPT ANSI B1.20 or Metric ISO 262
Material	Nickel plated Brass

Standards and Certificates

- Directive 2014/34/EU (ATEX)
- EN 60079 - 0 • EN 60079 - 1
  EN 60079 - 7 • EN 60079 - 31
- CE INERIS 14 ATEX 0029X
- IEC 60079 - 0 • IEC 60079 - 1
  IEC 60079 - 7 • IEC 60079 - 31
- IECEx INE 14.0038X

- Couplings of Series EM are used to join tubes with terminal male threading.

Options

- Materials: Stainless Steel AISI 316L ("S") on request.
- Size greater than 3".

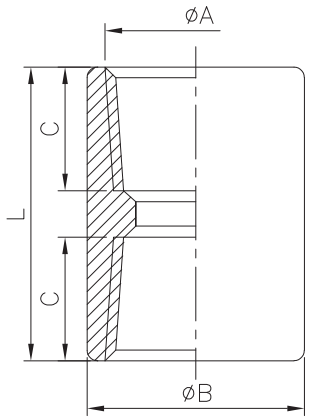

Code	Dimensions (mm)				Weight (g)
	ØA	ØB	C	L	
EM 38	3/8" NPT	22	17	40	50
EM 1	1/2" NPT	27	19	40	70
EM 2	3/4" NPT	31	19	40	100
EM 3	1" NPT	38	24	50	200
EM 4	1.1/4" NPT	46	24	50	230
EM 5	1.1/2" NPT	56	24	50	260
EM 6	2" NPT	66	24	50	330
EM 7	2.1/2" NPT	82	32	70	760
EM 8	3" NPT	92	32	70	940

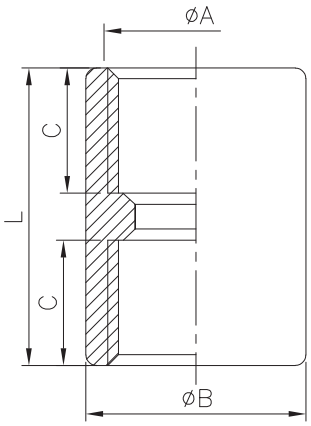

Code	Dimensions (mm)				Weight (g)
	ØA	ØB	C	L	
EM 16	M16x1.5	22	18	40	70
EM 20	M20x1.5	27	18	40	90
EM 25	M25x1.5	31	18	40	130
EM 32	M32x1.5	38	18	50	220
EM 40	M40x1.5	46	20	50	270
EM 50	M50x1.5	56	20	50	340
EM 63	M63x1.5	70	20	50	460
EM 75	M75x1.5	82	24	70	850
EM 90	M90x1.5	98	24	70	1000

NOTES

- Extended operating temperature range is -40°C ÷ +100°C with EPDM O-ring.
- Extended operating temperature range is -60°C ÷ +180°C with Silicone O-ring.
- The fitting may be mounted on electrical equipment suitable for group IM2 (firedamp mines) if it is not made of Aluminum light alloy. The resulting mode of protection will be: Ex d I Mb.

Order COding

Example: EM3G

Type	Size and Threading	Material
EM	**38/1/2/3/4/5/6/7/8 =** NPT ANSI B1.20	**B =** Nickel plated Brass
	16/20/25/32/40/50/63/75/90 = Metric ISO 262	**S =** Stainless Steel AISI 316L

H

PLUGS

series **PLG**

Protection		Zone			
Gas		1-2	II2G	Ex d IIC Gb / Ex e IIC Gb
Dusts		21-22	II2D	Ex tb IIIC Db

Degree of Protection	
IP66	

Amb. Temp.			
Standard	-40°C		+100°C
Extended	-60°C		+180°C

Entries Threading	
NPT ANSI B1.20 or Metric ISO 262	

Material	
Nickel plated Brass	

Standards and Certificates

- Directive 2014/34/EU (ATEX)
- EN 60079 - 0 • EN 60079 - 1
  EN 60079 - 7 • EN 60079 - 31
- CE INERIS 14 ATEX 0029X
- IECEx: IEC 60079 - 0 • IEC 60079 - 1
  IEC 60079 - 7 • IEC 60079 - 31
- IECEx INE 14.0038X

- Plugs series PLG are used to close the unused entries. Hexagon cavity on the head ensure the possibility to open them only with special tools.

Options

- Materials: Stainless Steel AISI 316L ("S") on request.
- Size greater than 3".

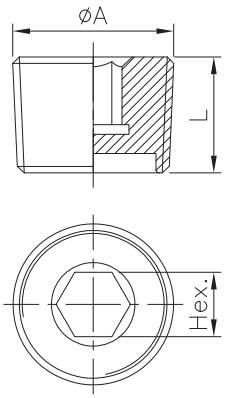

Code	Dimensions (mm)			Weight (g)
	ØA	Hex.	L	
PLG 38	3/8" NPT	8	16	20
PLG 1	1/2" NPT	10	18	40
PLG 2	3/4" NPT	10	22	60
PLG 3	1" NPT	12	22	110
PLG 4	1.1/4" NPT	12	22	130
PLG 5	1.1/2" NPT	12	22	160
PLG 6	2" NPT	12	22	210
PLG 7	2.1/2" NPT	14	29	360
PLG 8	3" NPT	14	29	560

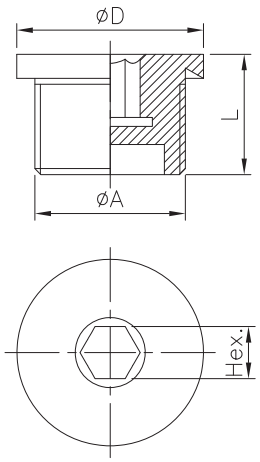

Code	Dimensions (mm)				Weight (g)
	ØA	ØD	Hex.	L	
PLG 16	M16x1.5	22	10	20	30
PLG 20	M20x1.5	26	10	20	50
PLG 25	M25x1.5	31	10	20	70
PLG 32	M32x1.5	38	12	20	110
PLG 40	M40x1.5	50	12	23	170
PLG 50	M50x1.5	60	12	23	210
PLG 63	M63x1.5	73	12	23	280
PLG 75	M75x1.5	85	14	26	450
PLG 80	M80x1.5	90	14	26	510
PLG 85	M85x1.5	95	14	26	550
PLG 90	M90x1.5	100	14	26	580

NOTES

- Extended operating temperature range is -40°C ÷ +100°C with EPDM O-ring.
- Extended operating temperature range is -60°C ÷ +180°C with Silicone O-ring.
- The fitting may be mounted on electrical equipment suitable for group IM2 (firedamp mines) if it is not made of Aluminum light alloy. The resulting mode of protection will be: Ex d I Mb.

Order Coding

Example: PLG25S

Type	Size and Threading	Material
PLG	**38/1/2/3/4/5/6/7/8 =** NPT ANSI B1.20	**B =** Nickel plated Brass
	16/20/25/32/40/50/63/75/80/85/90 = Metric ISO 262	**S =** Stainless Steel AISI 316L

BENDS

series **ELF**

Protection		Zone			
Gas		1-2	II2G	Ex d IIC Gb / Ex e IIC Gb
Dusts		21-22	II2D	Ex tb IIIC Db

Degree of Protection	
IP66/67	

Amb. Temp.			
Standard	-55°C	+150°C
Extended	-60°C	+180°C

Entries Threading	
NPT ANSI B1.20 or Metric ISO 262	

Material	
Aluminium	

Standards and Certificates

- Directive 2014/34/EU (ATEX)
- EN 60079 - 0 • EN 60079 - 1
  EN 60079 - 7 • EN 60079 - 31
- CE CESI 01 ATEX 104U
- IEC 60079 - 0 • IEC 60079 - 1
  IEC 60079 - 7 • IEC 60079 - 31
- IEC-Ex CES 15.0005U

- 90° Bends Series ELF are used in the electrical installation in tube.

Options

- Size greater than 3".

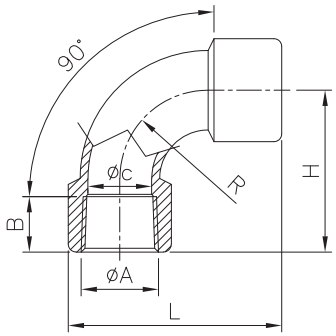

Code	Dimensions (mm)				Weight (g)
	ØA	L	H	R	
ELF 1	1/2" NPT	60	45	30	120
ELF 2	3/4" NPT	75	55	30	100
ELF 3	1" NPT	85	65	35	200
ELF 4	1.1/4" NPT	100	75	50	390
ELF 5	1.1/2" NPT	110	87	50	370
ELF 6	2" NPT	135	98	60	620
ELF 7	2.1/2" NPT	175	135	65	880
ELF 8	3" NPT	210	160	85	1480

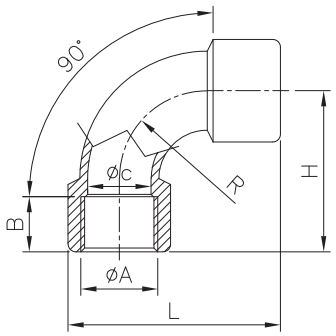

Code	Dimensions (mm)				Weight (g)
	ØA	L	H	R	
ELF 20	M20x1.5	60	45	30	120
ELF 25	M25x1.5	75	55	30	100
ELF 32	M32x1.5	85	65	35	200
ELF 40	M40x1.5	100	75	50	390
ELF 50	M50x1.5	110	87	50	370
ELF 63	M63x1.5	135	98	60	620
ELF 75	M75x1.5	175	135	65	880
ELF 90	M90x1.5	210	160	85	1480

Order Coding

Example: ELF3

Type	Size and Threading	Material
ELF	1/2/3/4/5/6/7/8 = NPT ANSI B1.20 20/25/32/40/50/63/75/80/85/90 = Metric ISO 262	– = Aluminum

H

INSPECTABLE BENDS

series **LBH**

Protection		Zone			
Gas		1-2	II2G	Ex d IIB
Dusts		n.a.	n.a.	n.a.

Degree of Protection	IP66
Entries Threading	EN 10226 (Gk)
Material	Aluminum light alloy

Amb. Temp.			
Standard	-20°C	+40°C
Extended	-20°C	+60°C

Standards and Certificates

Directive 2014/34/EU (ATEX)

EN 60079-0 • EN 60079-1

U CESI 03 ATEX 141U

- Recommended for positioning and bending of large conductors.
- Tangent lid opening to facilitate inspection operations.
- The series LBH is recommended for small section conductor bundles.
- Galvanized steel screws.

Options

- Threading NPT ANSI B1.20.1 (N)

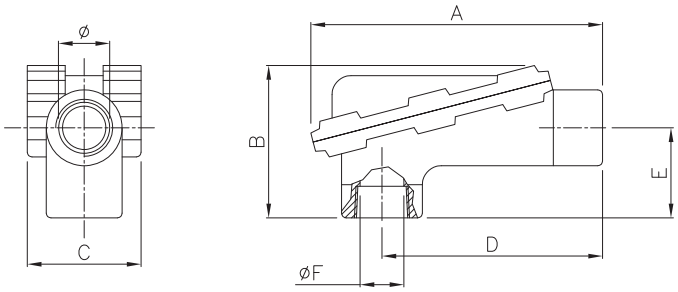

Code	Dimensions (mm)							Weight (g)
	Ø	A	B	C	D	E	ØF	
LBH 2	3/4"	160	95	70	132	45	19	410
LBH 3	1"	165	112	70	129	60	25	470
LBH 5	1.1/2"	265	133	110	217	81	38	1170
LBH 6	2"	266	133	110	217	81	48	1045
LBH 7	2.1/2"	363	250	138	267	138	62	3510
LBH 8	3"	363	250	138	267	138	70	3160
LBH 9	4"	710	280	185	600	160	90	9870

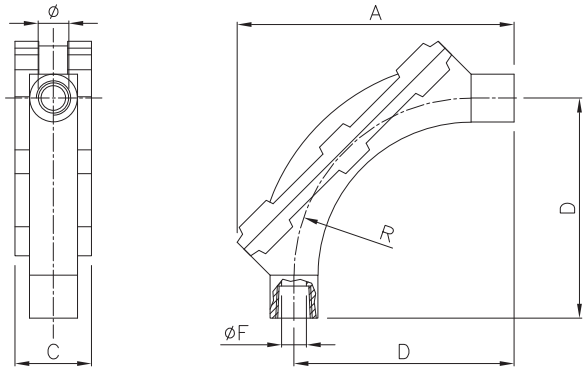

Code	Dimensions (mm)						Weight (g)
	Ø	A	C	D	ØF	R	
LBHS 3	1"	245	74	236	25	200	1285
LBHS 5	1.1/2"	285	103	280	38	250	1480
LBHS 6	2"	440	117	380	48	360	2285
LBHS 7	2.1/2"	440	145	350	62	320	6230
LBHS 8	3"	632	150	550	70	500	6770

INSERTION FITTINGS

series **EKC**

Protection		Zone			
Gas		1-2	II2G	Ex d IIB
Dusts		n.a.	n.a.	n.a.

Degree of Protection	IP66

Amb. Temp.			
Standard	-20°C		+40°C
Extended	-20°C		+60°C

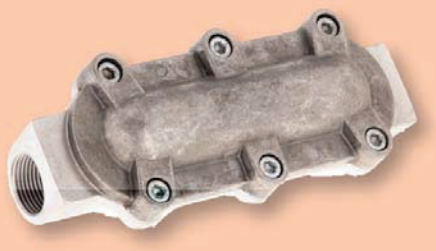

Entries Threading	EN 10226 (Gk)
Material	Aluminum light alloy

Standards and Certificates

Directive 2014/34/EU (ATEX)

EN 60079-0 • EN 60079-1

U CESI 03 ATEX 141U

- Recommended to facilitate the insertion and laying of the conductors along long stretches of conduits.
- Galvanized steel screws.

Options

- Threading NPT ANSI B1.20.1 (N)

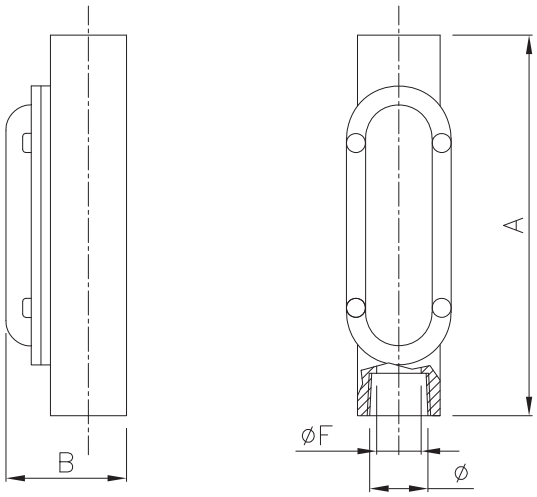

Code	Dimensions (mm)					Weight (g)
	Ø	A	B	C	ØF	
EKC 2	3/4"	173	60	70	19	480
EKC 3	1"	183	67	70	25	557
EKC 5	1.1/2"	243	90	102	38	1145
EKC 6	2"	300	112	104	48	1750
EKC 7	2.1/2"	380	174	138	62	3600
EKC 8	3"	380	174	138	70	3620

Order Coding

Example: LBH3

Type
- **LBH =** Inspectable bend
- **LBHS =** Inspectable bend
- **EKC =** Insertion fitting

Example: LBHS3

Dimension
- **1/2/3/4/5/6/7/8**

Example: EKC5N

Threading
- **..** = EN 10226 (Gk)
- **N** = NPT ANSI B1.20

H

ROTATING JOINTS

series **T..**

Protection		Zone			
	Gas		1-2	II2G	Ex d IIC Gb / Ex e IIC Gb
	Dusts		21-22	II2D	Ex tb IIIC Db
	Mine		n.a.	IM2	Ex d I Mb

Degree of Protection	IP66
Threading	NPT ANSI B1.20
Material	Nickel plated Brass

Amb. Temp.		-20°C	+40°C
	Standard		
	Extended	n.a.	n.a.

Standards and Certificates

Directive 2014/34/EU (ATEX)

EN 60079 - 0 • EN 60079 - 1
EN 60079 - 7 • EN 60079 - 31

TUV 14 ATEX 149645U

IEC 60079 - 0 • IEC 60079 - 1
IEC 60079 - 7 • IEC 60079 - 31

IECEx TUN 14.0032U

NEW!

- Joining elements that allow, even after tightening, the rotation of the pipe or of the connecting element.
- They can be used as a termination of any flexible conduit. They eliminate possible torsion effects due to tightening and allow the rotation of the hose for 360° on its axis.

Options
- Threading Metric ISO 262.
- Material: Stainless Steel AISI 316L ("S").

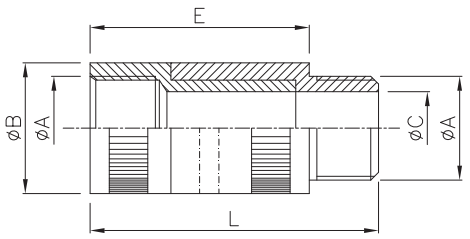

Code	ØA [NPT]	Code	ØA [ISO 262]	Dimensions (mm) ØB	ØC	E	L	Weight (g)
TY 1	1/2"	TY 20	M20x1,5	26	15	60	78	165
TY 2	3/4"	TY 25	M25x1,5	34	19	60	78	265
TY 3	1"	TY 32	M32x1,5	40	25	67	85	405
TY 4	1.1/4"	TY 40	M40x1,5	50	34	67	89	560
TY 5	1.1/2"	TY 50	M50x1,5	58	39	67	89	800
TY 6	2"	TY 63	M63x1,5	70	50	67	89	1040

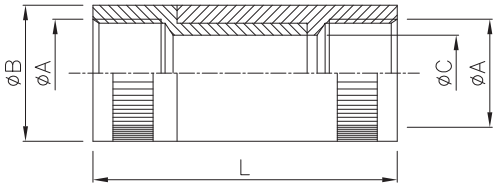

Code	ØA [NPT]	Code	ØA [ISO 262]	Dimensions (mm) ØB	ØC	L	Weight (g)
TF 1	1/2"	TF 20	M20x1,5	26	15	80	165
TF 2	3/4"	TF 25	M25x1,5	34	19	80	265
TF 3	1"	TF 32	M32x1,5	40	25	90	405
TF 4	1.1/4"	TF 40	M40x1,5	50	34	90	560
TF 5	1.1/2"	TF 50	M50x1,5	58	39	90	800
TF 6	2"	TF 63	M63x1,5	70	50	90	1040

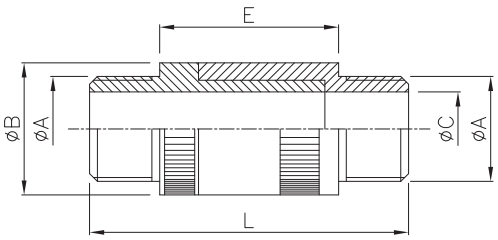

Code	ØA [NPT]	Code	ØA [ISO 262]	Dimensions (mm) ØB	ØC	E	L	Weight (g)
TM 1	1/2"	TM 20	M20x1,5	26	15	50	86	170
TM 2	3/4"	TM 25	M25x1,5	34	19	50	86	280
TM 3	1"	TM 32	M32x1,5	40	25	52	88	415
TM 4	1.1/4"	TM 40	M40x1,5	50	34	52	96	575
TM 5	1.1/2"	TM 50	M50x1,5	58	39	55	99	810
TM 6	2"	TM 63	M63x1,5	70	50	55	99	1060

Order Coding

Example: TY 3B

Type	Size and Threading	Material
TY = male/female	**1/2/3/4/5/6** = NPT ANSI B1.20	**B** = Nickel plated Brass
TF = female/female (on request)	**20/25/32/40/50/63** = Metric ISO 262	**S** = Stainless Steel AISI 316L
TM = male/male (on request)		