LCS 1

series **LCS**

Protection		Zone			
Mines		n.a.	IM2	Ex d I Mb
Gas		1-2	II2G	Ex d IIC T6÷T5 Gb
Dust		21-22	II2D	Ex tb IIIC T85°C÷T100°C Db



Degree of Protection	IP66
Entries Threading	NPT ANSI B1.20
Material	Stainless Steel AISI 316L
Painting	See Options

Amb. Temp.			
Standard	-20°C	+40°C
Extended	-50°C	+80°C

Standards and Certificates

Directive 2014/34/UE (ATEX)
EN 60079-0 • EN 60079-1
EN 60079-31
CE BVI 15 ATEX 0073

IECEx
IEC 60079-0 • IEC 60079-1
IEC 60079-31
IECEx EPS 15.0069

- External stainless steel screws and accessories.
- Configurable with a commandl/signaling unit or a rotary cam switch.
- Maximum voltage 230 Vac with unit and 690 Vac with rotary cam switch.
- Maximum current 10 A with unit and 20 A with rotary cam switch.

Options

- Cable entries with isometric thread (M).
- External painting: on customer's request.

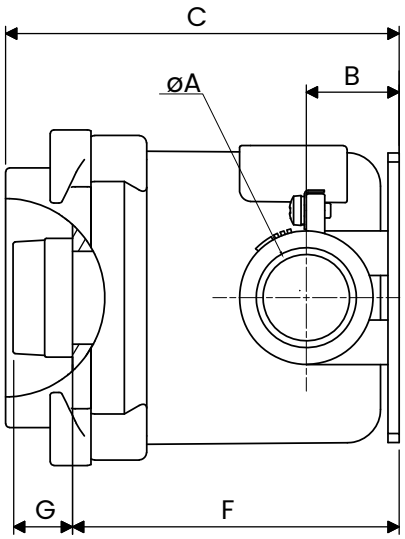

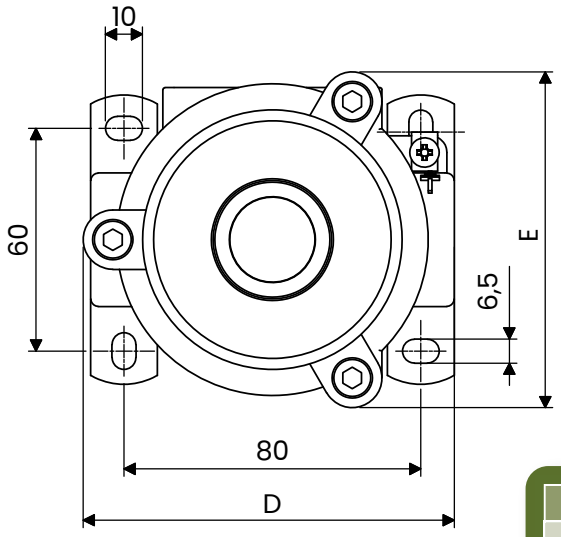

NOTES

It is recommended to read the installation and maintenance instructions.

* The unit height depends on its type. See section C.

Code	ØA	B	C	D	E	F
LCS 251	M25x1.5	25	106	100	90.5	88
LCS 21	3/4 " NPT	25	106	100	90.5	88

Element code	G
... (unit)	*
... (switch)	27
L	25.5
Y	61.5
H	46.5

Order coading

Example: LCS21LRB-K1012

Type	Threading	Code of installed elements	Lockable knob color	Electrical contact
LCS	251 = M25x1.5	... = Unit or switch	RD = Red	See table pag. I14 - I15
	21= 3/4'' NPT	L = Lockable switch	BK = Black	
		Y = Key switch		
		H = Triangular key switch		

Key code
A = 3103
B = 3108

LCS 3

series **LCS**

Protection		Zone			
	Mines		n.a.	IM2	Ex d I Mb
	Gas		1-2	II2G	Ex d IIC T6÷T5 Gb
	Dust		21-22	II2D	Ex tb IIIC T85°C÷T100°C Db



Degree of protection	IP66
Entries Threading	NPT ANSI B1.20
Material	Stainless Steel AISI 316L
Painting	See Options

Amb. Temp.			
Standard	-20°C	+40°C
Extended	-50°C	+80°C

Standards and Certificates

- Directive 2014/34/UE (ATEX)
- EN 60079-0 • EN 60079-1 EN 60079-31
- CE BVI 15 ATEX 0073
- IECEx: IEC 60079-0 • IEC 60079-1 IEC 60079-31
- IECEx EPS 15.0069

- External stainless steel screws and accessories.
- Configurable with up to 4 control/signaling unit or a rotary cam switch.
- Maximum voltage 230 Vac with unit and 690 Vac with rotary cam switch.
- Maximum current 10 A with unit and 40 A with rotary cam switch.

Options

- Cable entries with isometric thread (M).
- External painting: on customer's request.

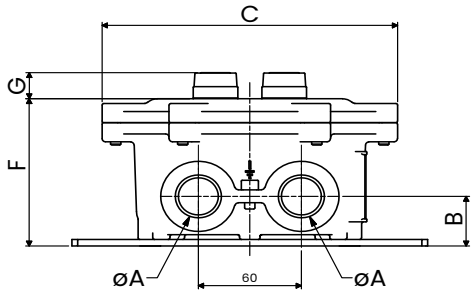

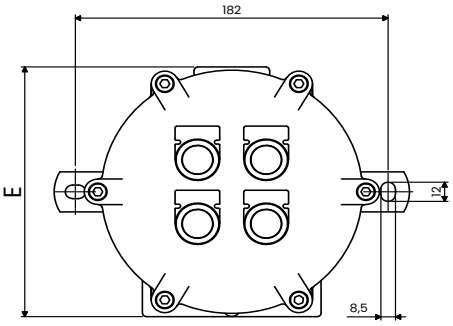

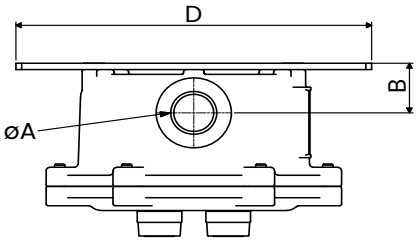

NOTES

It is recommended to read the installation and maintenance instructions.

* The unit height depends on its type. See section C.

Element code	G
... (unità)	*
... (interruttore)	34.5
L	30
Y	57
H	47

Code	ØA	B	C	D	E	F
LCS 23	3/4" NPT	31	172	207	156	92
LCS 33	1" NPT	31	172	207	156	92
LCS 253	M25X1.5	31	172	207	156	92
LCS 323	M32X1.5	31	172	207	156	92

Order coading

Example: LCS33YA-K1012

Type	Threading	Code of installed elements	Lockable knob color	Electric contact
LCS	23 = 3/4'' NPT	... = Unit or switch	RDY = Red-Yellow	See table pag. I14 - I15
	33 = 1'' NPT	L = Lockable switch	BKY = Black-Yellow	
	253 = M25X1.5	**Y =** Key switch		
	323 = M32X1.5	H = Triangular key switch		

Key code
A = 3103
B = 3108

LCS 3A

series **LCS**

Protection		Zone			
Mines		n.a.	IM2	Ex d I Mb
Gas		1-2	II2G	Ex d IIC T6÷T5 Gb
Dust		21-22	II2D	Ex tb IIIC T85°C÷T100°C Db

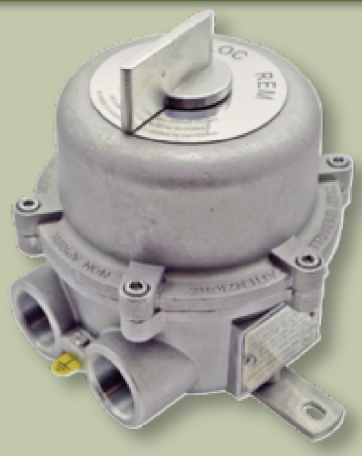

Degree of Protection	IP66
Entries Threading	NPT ANSI B1.20
Material	Stainless Steel AISI 316L
Painting	See Options

Amb. Temp.			
Standard	-20°C	+40°C
Extended	-50°C	+80°C

Standard and certificates

Directive 2014/34/UE (ATEX)

EN 60079-0 • EN 60079-1
EN 60079-31

CE BVI 15 ATEX 0073

IECEx

IEC 60079-0 • IEC 60079-1
IEC 60079-31

IECEx EPS 15.0069

- External stainless steel screws and accessories.
- Configurable with up to 2 control/signaling unit or a rotary cam switch.
- Maximum voltage 230 Vac with unit and 690 Vac with rotary cam switch.
- Maximum current 10 A with unit and 40 A with rotary cam switch.

Options

- Cable entries with isometric thread (M).
- External painting: on customer's request.
- LCS 3A can also include terminal strips.

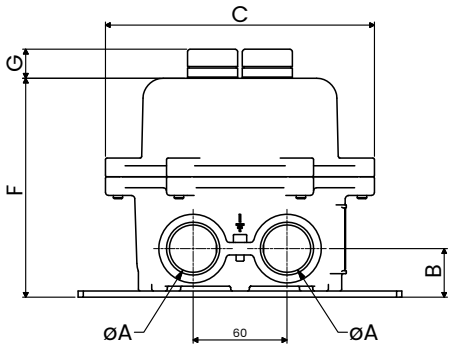

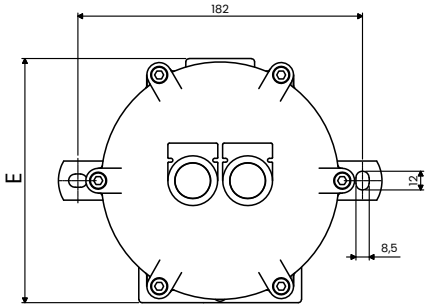

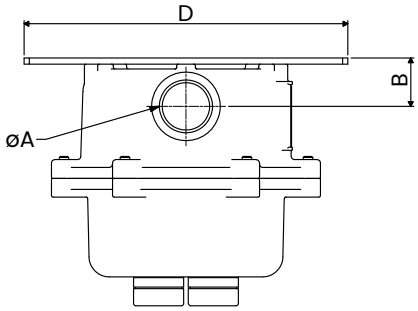

NOTES

It is recommended to read the installation and maintenance instructions.

* The unit height depends on its type. See section C.

Element code	G
... (unit)	*
... (switch)	34.5
L	30
Y	57
H	47

Code	ØA	B	C	D	E	F
LCS 23A	3/4" NPT	31	172	207	156	140
LCS 33A	1" NPT	31	172	207	156	140
LCS 253A	M25X1.5	31	172	207	156	140
LCS 323A	M32X1.5	31	172	207	156	140

Order coading

Example: LCS33YA-K1012

Type	Threading	Code of installed elements	Lockable knob color	Electric contact
LCS	23 = 3/4'' NPT	... = Unit or switch	RDY = Red-Yellow	* See table pag. I14 - I15
	33 = 1'' NPT	L = Lockable switch	BKY = Black-Yellow	
	253 = M25X1.5	**Y =** Key switch		
	323 = M32X1.5	H = Triangular key switch		

Key code
A = 3103
B = 3108

ROTARY SWITCH

series LCS

CODE	N° POLE	CORRENT Ith (A)	AC 3 RATED POWER (KW)	SWITCH ANGLES	CROSS SECTION (mm^2)	øW (mm)	L (mm)	FUNCTION
K1001	1	16	1.5	60°	2x1.5÷2.5	43	29.5	0-1 | ON/OFF
K2001	1	20	2.2	60°	2x1.5÷2.5	43	29.5	0-1 | ON/OFF
K3001	1	25	3	60°	2x1.5÷2.5	43	29.5	0-1 | ON/OFF
K4001	1	32	4	60°	2x2.5÷4	58	29.5	0-1 | ON/OFF
K5001	1	36	5.5	60°	2x2.5÷4	58	29.5	0-1 | ON/OFF
K6001	1	40	7.5	60°	2x2.5÷4	58	29.5	0-1 | ON/OFF
K7001	1	40	7.5	60°	2x6÷16	58	29.5	0-1 | ON/OFF
K1002	2	16	1.5	60°	2x1.5÷2.5	43	29.5	0-1 | ON/OFF
K2002	2	20	2.2	60°	2x1.5÷2.5	43	29.5	0-1 | ON/OFF
K3002	2	25	3	60°	2x1.5÷2.5	43	29.5	0-1 | ON/OFF
K4002	2	32	4	60°	2x2.5÷4	58	29.5	0-1 | ON/OFF
K5002	2	36	5.5	60°	2x2.5÷4	58	29.5	0-1 | ON/OFF
K6002	2	40	7.5	60°	2x2.5÷4	58	29.5	0-1 | ON/OFF
K7002	2	40	7.5	60°	2x6÷16	58	29.5	0-1 | ON/OFF
K1003	3	16	2.2	60°	2x1.5÷2.5	43	29.5	0-1 | ON/OFF
K2003	3	20	4	60°	2x1.5÷2.5	43	29.5	0-1 | ON/OFF
K3003	3	25	5.5	60°	2x1.5÷2.5	43	29.5	0-1 | ON/OFF
K4003	3	32	7.5	60°	2x2.5÷4	58	29.5	0-1 | ON/OFF
K5003	3	36	11	60°	2x2.5÷4	58	29.5	0-1 | ON/OFF
K6003	3	40	15	60°	2x2.5÷4	58	29.5	0-1 | ON/OFF
K7003	3	40	15	60°	2x6÷16	58	29.5	0-1 | ON/OFF
K1004	4	16	2.2	60°	2x1.5÷2.5	43	41	0-1 | ON/OFF
K2004	4	20	4	60°	2x1.5÷2.5	43	41	0-1 | ON/OFF
K3004	4	25	5.5	60°	2x1.5÷2.5	43	41	0-1 | ON/OFF
K4004	4	32	7.5	60°	2x2.5÷4	58	41	0-1 | ON/OFF
K5004	4	36	11	60°	2x2.5÷4	58	41	0-1 | ON/OFF
K6004	4	40	15	60°	2x2.5÷4	58	41	0-1 | ON/OFF
K7004	4	40	15	60°	2x6÷16	58	69	0-1 | ON/OFF
K1011	1	16	1.5	60°	2x1.5÷2.5	43	29.5	1-0-2 | MAINS TRANSFER
K2011	1	20	2.2	60°	2x1.5÷2.5	43	29.5	1-0-2 | MAINS TRANSFER
K3011	1	25	3	60°	2x1.5÷2.5	43	29.5	1-0-2 | MAINS TRANSFER
K4011	1	32	4	60°	2x2.5÷4	58	29.5	1-0-2 | MAINS TRANSFER
K5011	1	36	5.5	60°	2x2.5÷4	58	29.5	1-0-2 | MAINS TRANSFER
K6011	1	40	7.5	60°	2x2.5÷4	58	29.5	1-0-2 | MAINS TRANSFER
K1012	2	16	1.5	60°	2x1.5÷2.5	43	41	1-0-2 | MAINS TRANSFER
K2012	2	20	2.2	60°	2x1.5÷2.5	43	41	1-0-2 | MAINS TRANSFER
K3012	2	25	3	60°	2x1.5÷2.5	43	41	1-0-2 | MAINS TRANSFER
K4012	2	32	4	60°	2x2.5÷4	58	41	1-0-2 | MAINS TRANSFER
K5012	2	36	5.5	60°	2x2.5÷4	58	41	1-0-2 | MAINS TRANSFER
K6012	2	40	7.5	60°	2x2.5÷4	58	41	1-0-2 | MAINS TRANSFER
K1013	3	16	2.2	60°	2x1.5÷2.5	43	41	1-0-2 | MAINS TRANSFER
K2013	3	20	4	60°	2x1.5÷2.5	43	41	1-0-2 | MAINS TRANSFER
K3013	3	25	5.5	60°	2x1.5÷2.5	43	41	1-0-2 | MAINS TRANSFER
K4013	3	32	7.5	60°	2x2.5÷4	58	41	1-0-2 | MAINS TRANSFER
K5013	3	36	11	60°	2x2.5÷4	58	41	1-0-2 | MAINS TRANSFER
K6013	3	40	15	60°	2x2.5÷4	58	41	1-0-2 | MAINS TRANSFER
K1014	4	16	2.2	60°	2x1.5÷2.5	43	53.5	1-0-2 | MAINS TRANSFER
K2014	4	20	4	60°	2x1.5÷2.5	43	53.5	1-0-2 | MAINS TRANSFER

ROTARY SWITCH

series LCS

CODE	N° POLE	CURRENT Ith (A)	AC3 RATED POWER (KW)	SWITCH ANGLES	CROSS SECTION (mm²)	øW (mm)	L (mm)	FUNCTION
K3014	4	25	5.5	60°	2x1.5÷2.5	43	53.5	1-0-2 | MAINS TRANSFER
K4014	4	32	7.5	60°	2x2.5÷4	58	58	1-0-2 | MAINS TRANSFER
K5014	4	36	11	60°	2x2.5÷4	58	58	1-0-2 | MAINS TRANSFER
K6014	4	40	15	60°	2x2.5÷4	58	58	1-0-2 | MAINS TRANSFER
K1021	1	16	1.5	60°	2x1.5÷2.5	43	29.5	1-2 | CHANGE OVER
K2021	1	20	2.2	60°	2x1.5÷2.5	43	29.5	1-2 | CHANGE OVER
K3021	1	25	3	60°	2x1.5÷2.5	43	29.5	1-2 | CHANGE OVER
K4021	1	32	4	60°	2x2.5÷4	58	29.5	1-2 | CHANGE OVER
K5021	1	36	5.5	60°	2x2.5÷4	58	29.5	1-2 | CHANGE OVER
K6021	1	40	7.5	60°	2x2.5÷4	58	29.5	1-2 | CHANGE OVER
K1022	2	16	1.5	60°	2x1.5÷2.5	43	41	1-2 | CHANGE OVER
K2022	2	20	2.2	60°	2x1.5÷2.5	43	41	1-2 | CHANGE OVER
K3022	2	25	3	60°	2x1.5÷2.5	43	41	1-2 | CHANGE OVER
K4022	2	32	4	60°	2x2.5÷4	58	41	1-2 | CHANGE OVER
K5022	2	36	5.5	60°	2x2.5÷4	58	41	1-2 | CHANGE OVER
K6022	2	40	7.5	60°	2x2.5÷4	58	41	1-2 | CHANGE OVER
K1023	3	16	2.2	60°	2x1.5÷2.5	43	41	1-2 | CHANGE OVER
K2023	3	20	4	60°	2x1.5÷2.5	43	41	1-2 | CHANGE OVER
K3023	3	25	5.5	60°	2x1.5÷2.5	43	41	1-2 | CHANGE OVER
K4023	3	32	7.5	60°	2x2.5÷4	58	41	1-2 | CHANGE OVER
K5023	3	36	11	60°	2x2.5÷4	58	41	1-2 | CHANGE OVER
K6023	3	40	15	60°	2x2.5÷4	58	41	1-2 | CHANGE OVER

TERMINAL BLOCKS

series LCS

CODE	DESCRIPTION	CROSS SECTION (mm²)	Vmax (V)	Imax (A)	d (mm)	MAX QUANTITY
WDU2.5N	Feed-through terminal block 2,5 sqmm	1.5÷2.5	230	10	5.1	11
WDU4N	Feed-through terminal block 4 sqmm	1.5÷4	230	10	6.1	9
WPE2.5N	Modular PE terminal block 2,5 sqmm	1.5÷2.5	230	NA	5.1	11
WPE4N	Modular PE terminal block 4 sqmm	1.5÷4	230	NA	6.1	9

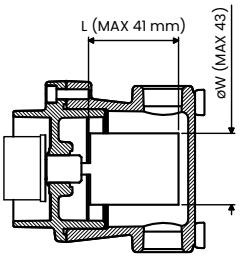

LCS 1

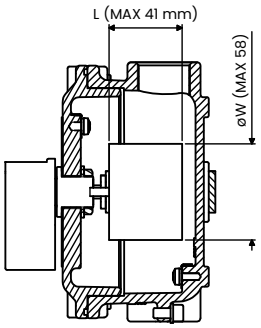

LCS 3

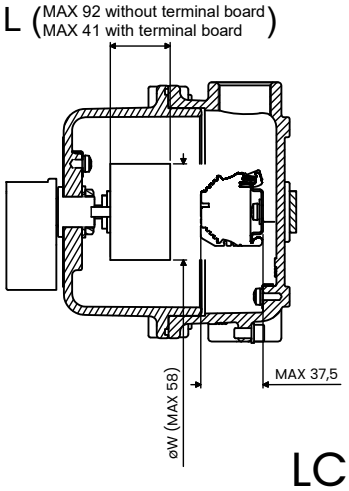

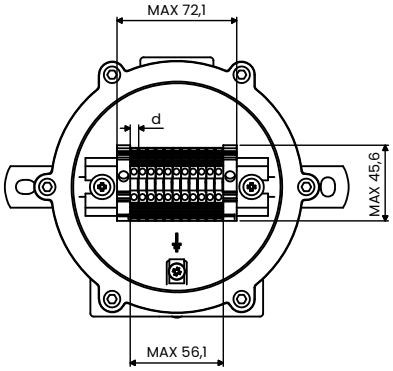

LCS 3A