AMBIENT TEMPERATURE THERMOSTATS

series **TA**

Protection		Zone			
Gas		1-2	II2G	Ex db IIB+H_2 T6÷T5 Gb
Dusts		21-22	II2D	Ex tb IIIC T85°C÷T100°C Db

Degree of Protection	IP65

Amb. Temp.			
Standard	-20°C		+40°C
Extended	-50°C		+60°C

Entries Threading	NPT ANSI B1.20
Material	Aluminum light alloy
Painting	External Epoxy RAL 7000

Standards and Certificates	
	Directive 2014/34/EU (ATEX)
	EN 60079-0 • EN 60079-1 EN 60079-31
CE	INERIS 13 ATEX 0039X
IECEx	IEC 60079-0 • IEC 60079-1 IEC 60079-31
	IECEx INE 13.0053X

- Thermostat with liquid expansion probe suitable for the automatic control of ambient temperature.
- Available either with external or internal temperature adjustment (type TA or type TAI respectively).
- The internal adjustment helps to prevent unauthorized manipulations.
- Bracket in galvanized steel, sheath in zinc plated brass.
- Plate and external screws in Stainless Steel.

Options

- Sheath and bracket in Stainless Steel AISI 316.
- Sheath of different lenght other than standard (L).
- Cable entry: cylindrical M25x1,5 (M).
- Control temperature range other than standard.

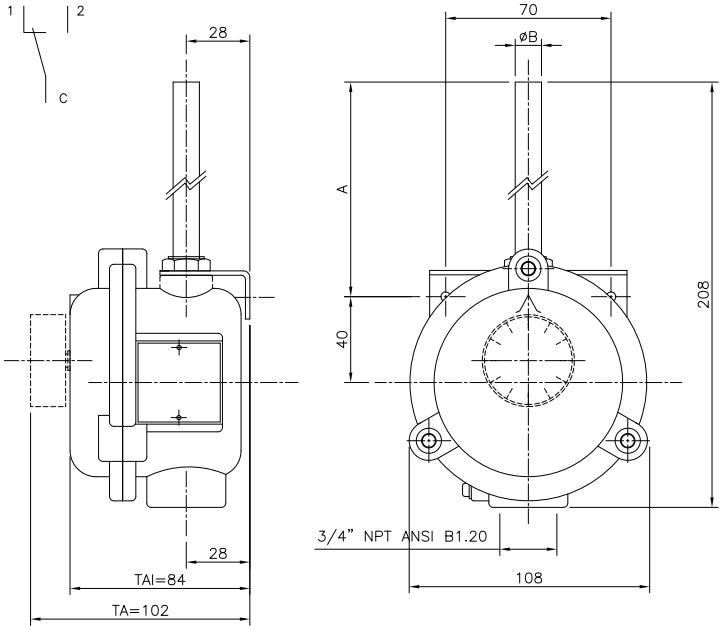

Code	Temperature Control Range (°C)	Max Bulb Temperature (°C)	Differential ΔT (°C)	A (mm)	ØB (mm)
TA 40/TAI 40	0°C÷40°C±2°C	50°C	3°C±1°C	112 ÷ 242	13
TA 90/TAI 90	0°C÷90°C±3°C	120°C	4°C±1°C	112 ÷ 242	10
TA 120/TAI 120	0°C÷120°C±3°C	150°C	4°C±1°C	112 ÷ 242	10

NOTES

It is reccommended to read the installation and maintenance instructions.

Temperature adjustment on TAI is allowed at open case only. This operation shall not be carried out with the thermostat powered and, in any case, far from hazardous atmosphere.

The Temperature class T6/T85°C takes into account an Ambient Temperature (A.T.) up to +40 °C, the Temperature class T5/T100°C an extened A.T. up to +60°C.

Order Coding

Example: TA 40N

Type	Temperature control range	Sheath	Threading
TA = thermostat with external adjustement	**40** = 0°C ÷ +40°C	**..** = std.	**N** = NPT (N)
TAI = thermostat with internal adjustement	**90** = 0°C ÷ +90°C	**L** = long version	**M** = metric (M)
	120 = 0°C ÷ +120°C		

CONTROL THERMOSTATS

series **TR**

Protection		Zone			
Gas		1-2	II2G	Ex db IIB+H_2 T6÷T5 Gb
Dusts		21-22	II2D	Ex tb IIIC T85°C÷T100°C Db

Degree of Protection	IP65

Amb. Temp.			
Standard	-20°C	+40°C
Extended	-50°C	+60°C

Entries Threading	NPT ANSI B1.20
Materiale	Aluminum light alloy
Painting	External epoxy RAL 7000

Standards and Certificates

- Directive 2014/34/EU (ATEX)
- EN 60079-0 • EN 60079-1 EN 60079-31
- CE INERIS 13 ATEX 0039X
- IEC 60079-0 • IEC 60079-1 IEC 60079-31
- IECEx INE 13.0053X

- Thermostat with liquid expansion probe.
- Recommended for the automatic control of liquids temperature and for industrial heating process.
- Its design allows the rapid replacement of the control unit without having to empty the process fluid containers.
- Available either with external or internal temperature adjustment (type TR or TRI respectively).
- The internal adjustment helps to prevent unauthorized manipulations.
- External sheath in AISI 316L Stainless Steel.
- Plate and external screws in Stainless Steel.

Options

- Sheath of different lenght other than standard (L).
- Cable entry: cylindrical M25x1,5 (M).
- Control temperature range other than standard.

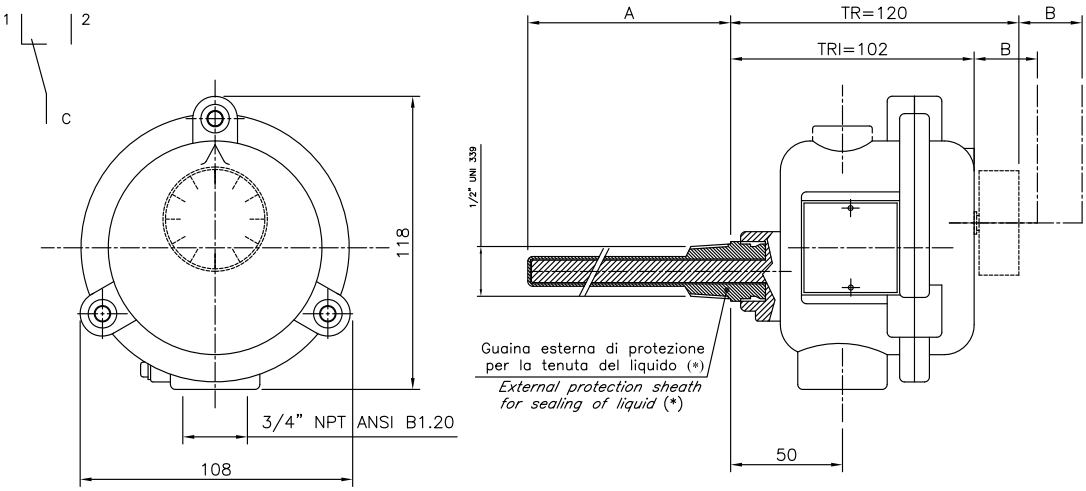

Code\	Temperature Control Range (°C)	Max Bulb Temperature (°C)	Differential ΔT (°C)	A (mm)	B (mm)
TR 40 TRI 40	0°C÷40°C±2°C	50°C	3°C±1°C	95 ÷ 225	111
TR 90 TRI 90	0°C÷90°C±3°C	120°C	4°C±1°C	95 ÷ 225	111
TR 120 TRI 120	0°C÷120°C±3°C	150°C	4°C±1°C	95 ÷ 225	111

B = Minimum clearance in mm to remove the case without removing the sheath.

NOTES

It is reccommended to read the installation and maintenance instructions.

(*) The temperature probe is protected by an internal explosion-proof sheath as well as by an external watertight sheath which induces a greater thermal inertia of the thermostat that raises the temperature reading of the controlled fluid. It's advisable to carry out tests on the adjustments to minimize this effect.

Temperature adjustment on TRI is allowed at open case only. This operation shall not be carried out with the thermostat powered and, in any case, far from hazardous atmosphere.

The Temperature Class T6/T85°C takes into account an Ambient Temperature (A.T.) up to +40 °C, the Temperature class T5/T100°C an extended A.T. up to +60°C

Order Coding

Exmple: TRI 120N

Type	Temperature control range	Sheath	Threading
TR = thermostats with external adjustement	**40** = 0°C ÷ +40°C	.. = std.	**N** = NPT (N)
TRI = thermostats with internal adjustement	**90** = 0°C ÷ +90°C	**L** = long version	**M** = metric (M)
	120 = 0°C ÷ +120°C		

F

SAFETY THERMOSTATS

series **TS**

Protection		Zone			
Gas		1-2	II2G	Ex db IIB+H_2 T6÷T5 Gb
Dusts		21-22	II2D	Ex tb IIIC T85°C÷T100°C Db

Degree of Protection	IP65

Amb. Temp.			
Standard	-20°C		+40°C
Extended	-50°C		+60°C

Entries Threading	NPT ANSI B1.20
Material	Aluminum light alloy
Painting	External Epoxy RAL 7000

Standards and Certificates

- Directive 2014/34/EU (ATEX)
- EN 60079-0 • EN 60079-1 EN 60079-31
- CE INERIS 13 ATEX 0039X
- IEC 60079-0 • IEC 60079-1 IEC 60079-31
- IECEx INE 13.0053X

- Thermostat with liquid expansion probe with manual reset and positive safety for capillary breakup.
- Especially suitable for boilers, heating systems and in all applications where it is necessary not to exceed the maximum temperature set.
- Its design allows the rapid replacement of the control unit without having to empty the process fluid containers.
- External sheath in AISI 316L Stainlees Steel.
- Plate and external screws in Stainless Steel.

F

Options

- Cable entry: cylindrical threading M25x1,5 (M).
- Thermostat with automatic reset.
- Control temperature range other than standard.

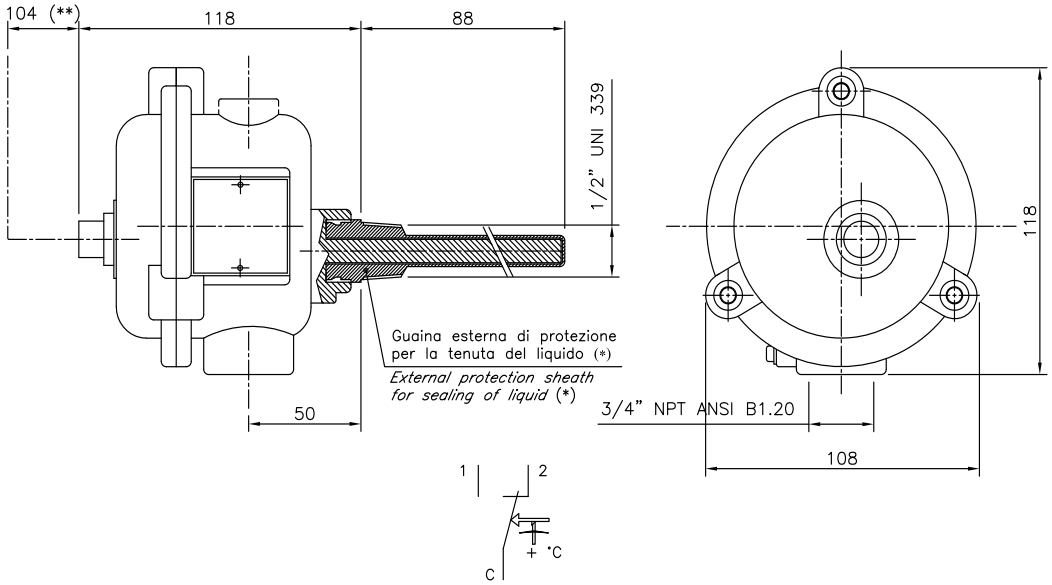

Code	Control Temperature (°C)	Max Bulb Temperature (°C)	Differential ΔT (°C)
TS 100	100°C $^{+0°C}_{-6°C}$	125°C	15°C±8°C

Order Coding

Example: TS 100N

Type	Control Temperature	Threading
TS = safety thermostat	**100** = 100°C	**N** = NPT (N) **M** = metric (M)

NOTES

It is reccommended to read the installation and maintenance instructions .

The temperature probe is protected by an internal explosionproof sheath as well as by an external watertight sheath which induces a greater thermal inertia of the thermostat that raises the temperature reading of the controlled fluid. It's advisable to carry out tests on the adjustments to minimize this effect.

The Temperature Class T6/T85°C takes into account an Ambient Temperature (A.T.) up to +40 °C, the Temperature class T5/T100°C an extended A.T. up to +60°C.

(**) Minimum space in mm to remove the case without removing the sheath.